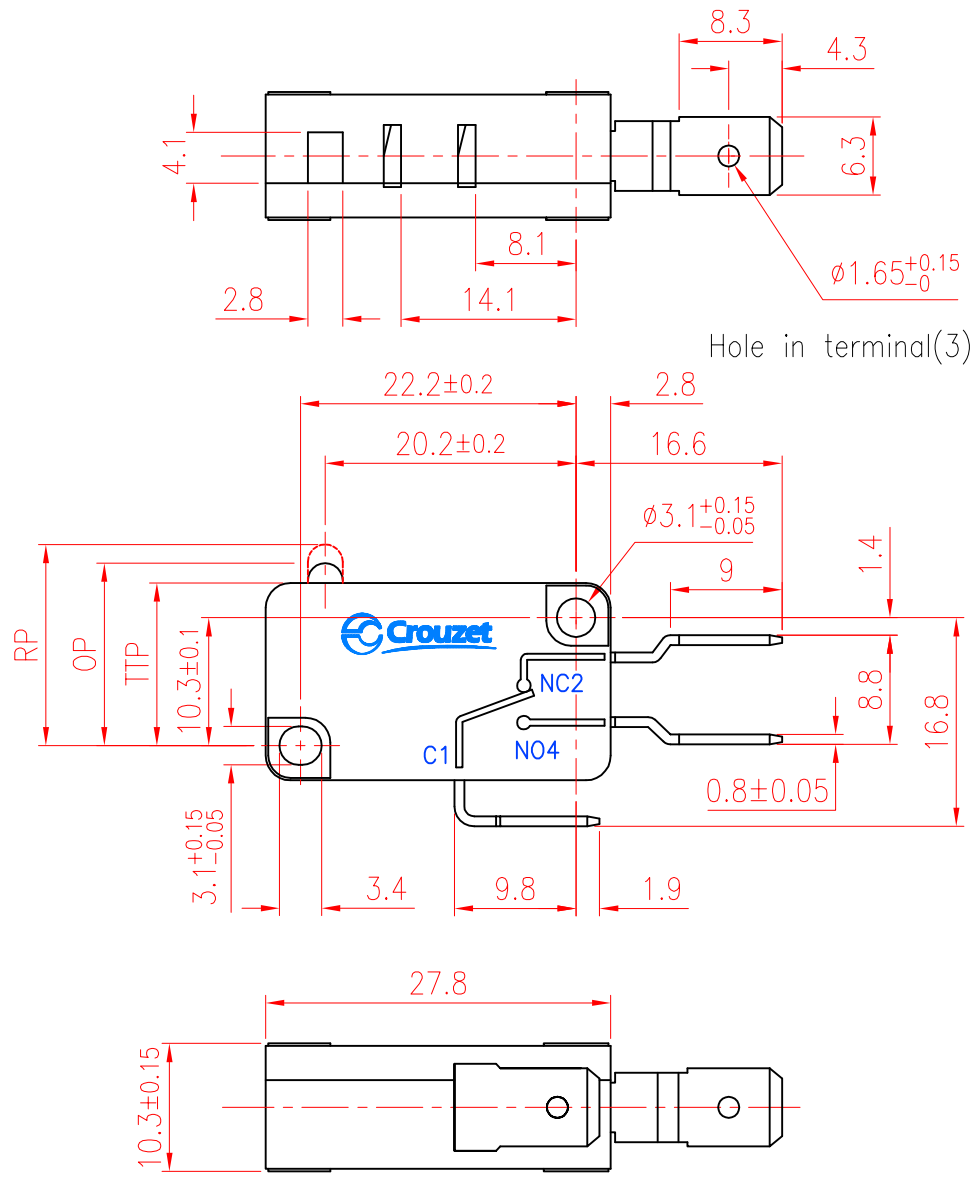

Conform to SP9331

	ITEM	Standards
OF	Operating Force	200gf Max.
RF	Release Force	50gf Min.
OP	Operating Position	14.7+/−0.5mm
DT	Differential Travel	0.4mm Max.
RP	Rest Position	16.2mm Max.
TTP	Total Travel Position	13.2mm Max.

Number		Ampere	OF(gf)
8326	1	16	200
	3	16	100
	5	5	25
	8	0.1	100
	9	0.1	25

Load	8A 250V AC
Insulation Resistance	100M Min.
Service Life	Mechanical 1,000,000
	Electrical 50,000
Dielectric Strength 50−60HZ	1000VAC Between terminals
	1500VAC Between terminals and ground

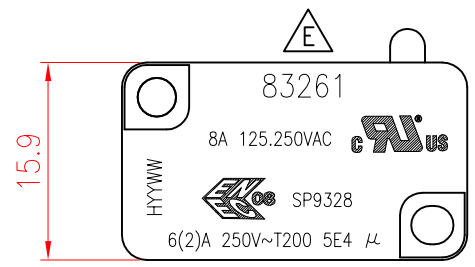

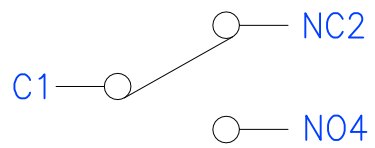

CIRCUIT

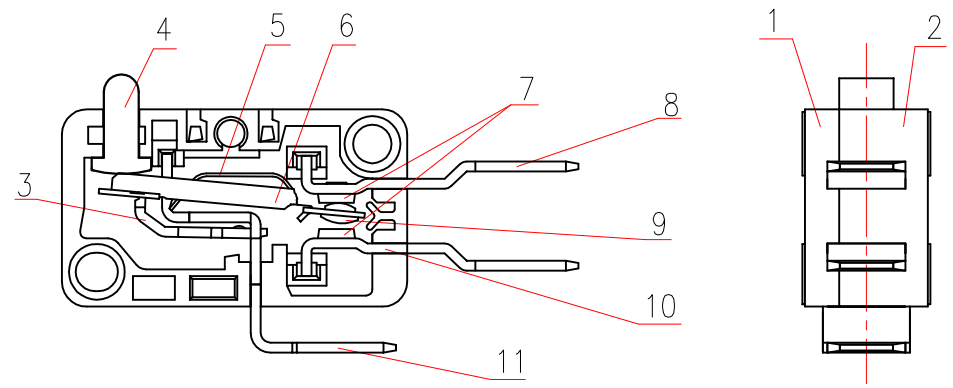

11	C1 TERMINAL	C2680R−H	1	Ag PLATED
10	NO4 TERMINAL	C2680R−H	1	Ag PLATED
9	MOVABLE PLATE CONTACT	AgNi10	1	NATURAL
8	NC2 TERMINAL	C2680R−H	1	Ag PLATED
7	TERMINAL NO/NC CONTACT	AgNi10	2	NATURAL
6	MOVABLE PLATE	C5191R−EH	1	Ag PLATED
5	SPRING PLATE	SUS301−3/4H	1	NATURAL
4	**KNOB**	**ZEN6140L BK010**	1	**BLACK**
3	FIXED PLATE	C2680R−H	1	Ag PLATED
2	**HOUSE**	**ZEN6140L BK010**	**1**	**BLACK**
1	**COVER**	**ZEN6140L BK010**	**1**	**BLACK**
NO.	PARTS	MATERIAL	QTY.	FINISHING

2009.12.22	E	Modify the marking	Modified by	J.YANG
			Verified by	O.MOU
			Authorized by	J.ESPOSITO

Customer:

Customer Ref.:

TITLE	MICRO SWITCH V3D	DRAWN	J.YANG	2008.06.13	SCALE /
DESC	**SP932800**	CHECKED	O.MOU	2008.06.13	UNIT mm
DRAW NO.	83261110	APPROVED	J.ESPOSITO	2008.06.13	
REVISION	E	FORMAT A4	FOLIO	1/1	

TOLERANCE OTHERWISE UNLESS SPECIFIED

LESS THAN 5	±0.25
BETWEEN 5 ~30	±0.35
BETWEEN 30 ~50	±0.50
MORE THAN 50	±0.70
ANGLE	±3°

Crouzet

CROUZET AUTOMATISMES

Department:

PD Huizhou

This document is the property of Crouzet−Automatismes.
It's contents cannot be reproduced or divulged without the company's written approval.
The product data and specifications found on this document
do not constitute any contractual obligation.
Crouzet−Automatismes and its subsidiaries reserve the right to modify the specifications.
All rights of reproduction, modification, reprinting, and transtation reserved for all countries