THIS DRAWING IS UNPUBLISHED. RELEASED FOR PUBLICATION 2006
© COPYRIGHT 2006 Tyco Electronics AMP GmbH ALL RIGHTS RESERVED.

LOC	DIST
A1	-

REVISIONS

P	LTR	DESCRIPTION	DATE	DWN	APVD
	B1	ECR-11-013858	04JUL2011	SR	PF
	B2	ECR-16-015318	19SEP2017	GR	MKO
	B3	ECR-16-016768	15NOV2017	GR	MKO
	B4	ECR-17-013084	29MAR2018	SG	MKO

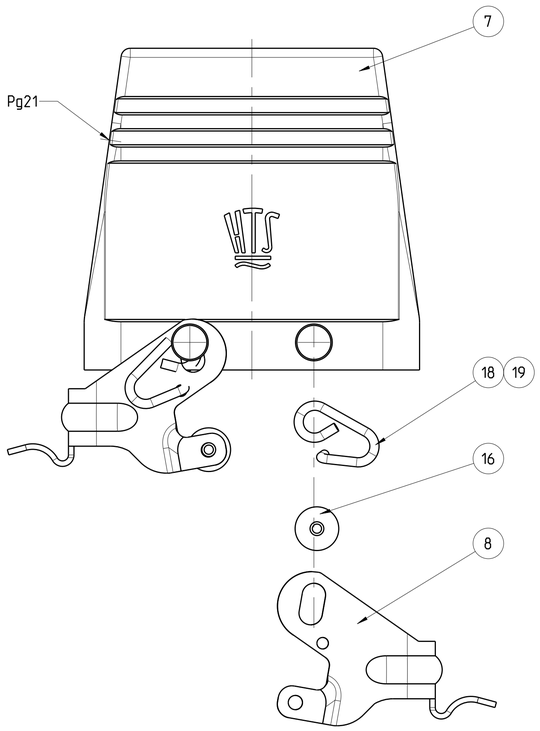

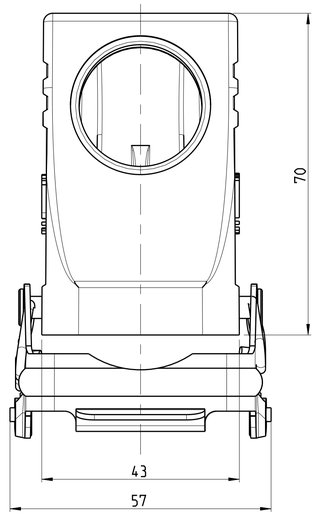

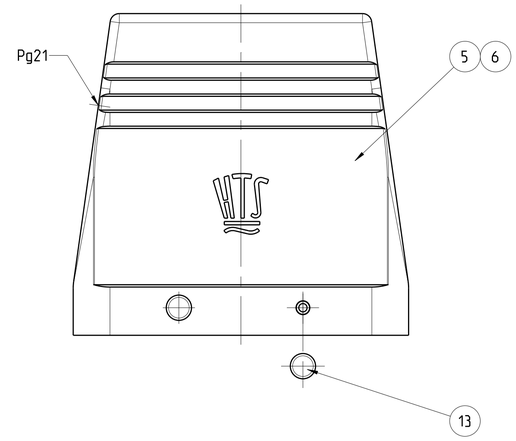

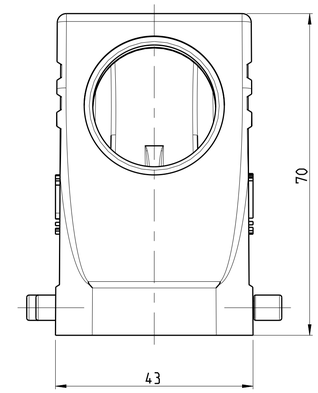

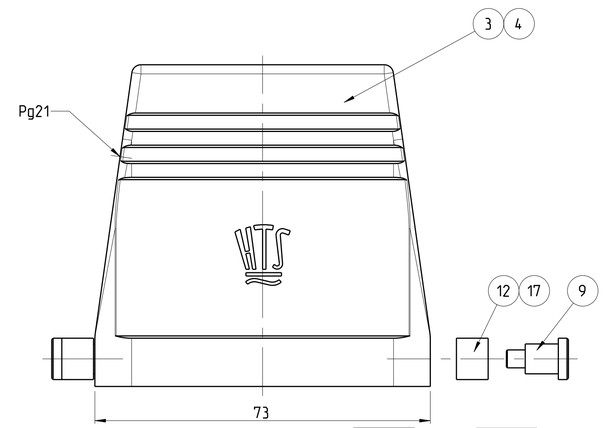

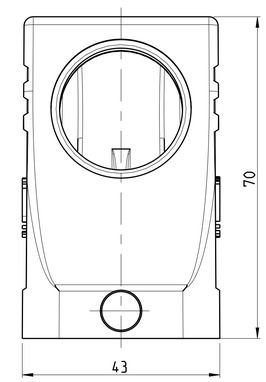

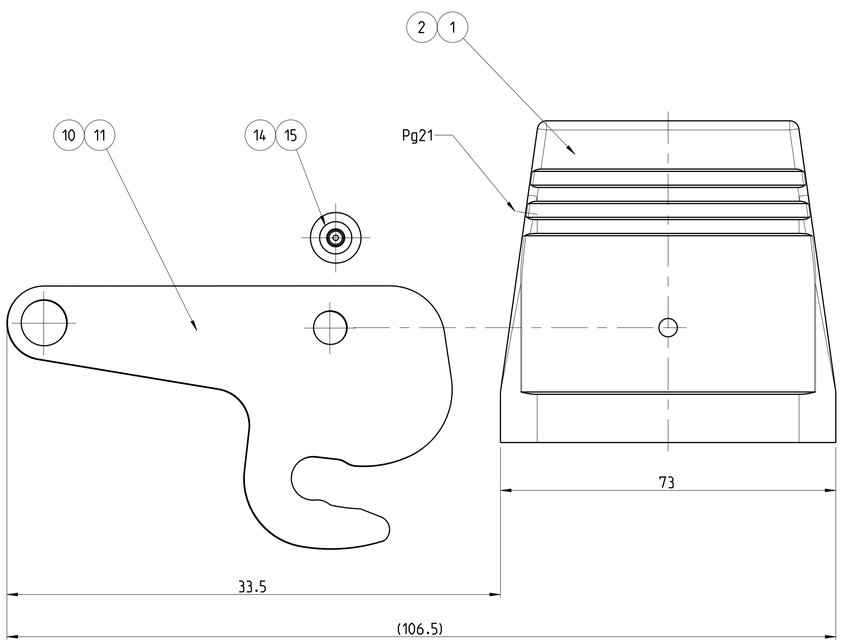

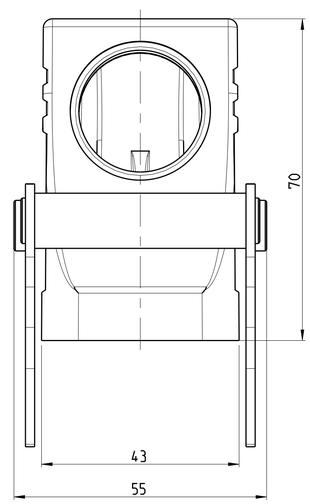

OBSOLETE					OBSOLETE									
2										BÜGELFEDER LINKS	FEDERSTAHLDRAHT	VERZINKT		19
2										BÜGELFEDER RECHTS	FEDERSTAHLDRAHT	VERZINKT		18
					2					GLEITROLLE	STAHL	VERZINKT	BLUE	17
4										BÜGELHALTER	STAHL	VERZINKT	BLUE	16
							2			BÜGELHALTER ZENTRALBÜGEL	V2A			15
									2	BÜGELHALTER ZENTRALBÜGEL	STAHL	VERZINKT	BLUE	14
		4								BÜGELBOLZEN	V2A			13
				2						BÜGELBOLZEN	V2A			12
							1			ZENTRAL-BÜGEL	V2A			11
									1	ZENTRAL-BÜGEL	STAHL	VERZINKT	BLUE	10
					2					LB-BÜGEL	STAHL	VERZINKT	BLUE	9
2										VS-BÜGEL	STAHL	VERZINKT	BLUE	8
1										HOOD HD.24	ALUMINIUM/ALU		GREY	7
		1								HOOD HD.24	ALUMINIUM/ALU	ALUMINIUM OXID	BLACK	6
			1							HOOD HD.24	ALUMINIUM/ALU		GREY	5
				1						HOOD HD.24	ALUMINIUM/ALU	ALUMINIUM OXID	BLACK	4
					1					HOOD HD.24	ALUMINIUM/ALU		GREY	3
							1			HOOD HD.24	ALUMINIUM/ALU	ALUMINIUM OXID	BLACK	2
									1	HOOD HD.24	ALUMINIUM/ALU		GREY	1
1-1	2-6	1-6	2-7	1-7	2-3	1-3				DESCRIPTION	MATERIAL	SURFACE	COLOR	ITEM

HD-Z.24.STS-ZB.1.21.G
~~HD-K/Z.24.STS-ZB.1.21.G~~
~~HD.24.STS-GR.1.21.G~~
HD-K.24.STS-GR.1.21.G
HD.24.STS.1.21.G
~~HD-K.24.STS.1.21.G~~
~~HD.24.STS-VS.1.21.G~~

THIS DRAWING IS A CONTROLLED DOCUMENT.

DIMENSIONS: mm

TOLERANCES UNLESS OTHERWISE SPECIFIED:
0 PLC ±
1 PLC ±±
2 PLC ±±±
3 PLC ±±±±
4 PLC ±±±±±
ANGLES ±1°

MATERIAL - -
FINISH - -

DWN R.SCHNEIDER 04JUL2011
CHK T.SCHNURPFEIL 04JUL2011
APVD -
PRODUCT SPEC -
APPLICATION SPEC -
WEIGHT -

TE Connectivity

NAME Hood HD.24
ASSY HD.24.STS.1.21.G
-

SIZE	CAGE CODE	DRAWING NO	RESTRICTED TO
A1	00779	C-1102496	

CUSTOMER DRAWING SCALE 5:1 SHEET 1 OF 1 REV B4

4805 (3/11)