THIS DRAWING IS UNPUBLISHED. RELEASED FOR PUBLICATION -
© COPYRIGHT - BY TYCO ELECTRONICS CORPORATION. ALL RIGHTS RESERVED.

LOC	DIST
H	-

REVISIONS

P	LTR	DESCRIPTION	DATE	DWN	APVD
	A	FIRST ISSUE	24SEP2008	JV	RD

NOTES:

1. ITEMS PROVIDED TO THIS SPECIFICATION SHALL BE IDENTIFIED ON THE CONTAINER WITH THE FOLLOWING INFORMATION: PART NUMBER & DATE CODE OF MFR.
2. MATERIAL: COPPER ALLOY
3. FINISH: SILVER PLATED 5µm MIN THK.
   OVER NICKEL 1µm MIN THK.

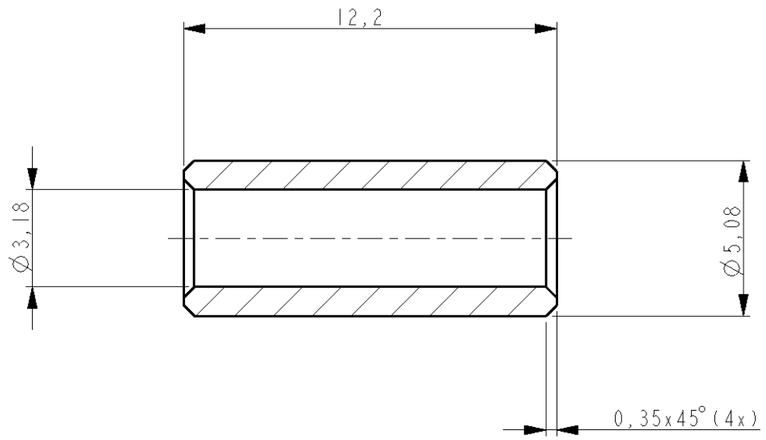

SECTION A-A

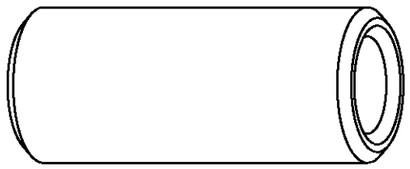

ORDERNR: 1766885-1 AS SHOWN

THIS DRAWING IS A CONTROLLED DOCUMENT FOR TYCO ELECTRONICS CORPORATION. IT IS SUBJECT TO CHANGE AND THE CONTROLLING ENGINEERING ORGANIZATION SHOULD BE CONTACTED FOR THE LATEST REVISION.

DIMENSIONS: mm

TOLERANCES UNLESS OTHERWISE SPECIFIED:

0 PLC	±-
1 PLC	±0,2
2 PLC	±0,1
3 PLC	±-
4 PLC	±-
ANGLES	±3°

MATERIAL -

FINISH -

DWN J.VOS 24-Sep-08
CHK R.DAAMEN 24-Sep-08
APVD R.VD.SANDT -
PRODUCT SPEC -
APPLICATION SPEC -
WEIGHT -

Tyco Electronics

Tyco Electronics Corporation
's-Hertogenbosch, Nederland

NAME
BUSHING, SIZE #8 REDUCER
CRIMP TO SIZE #12 AWG, RAPID LOCK
-

SIZE	CAGE CODE	DRAWING NO	RESTRICTED TO
A3	00779	C-1766885	-

CUSTOMER DRAWING

SCALE 5:1 SHEET 1 OF 1 REV A

AMP 1470-19 REV 31MAR2000

Pro/ENGINEER DRAWING