© 2019 TE Connectivity. All Rights Reserved.

REVISIONS					
P	LTR	DESCRIPTION	DATE	DWN	APVD
	D2	REVISED PER ECO-11-005150	30MAR2011	RK	HMR
	D3	ACTIVATION OF PN 1-1452203-1	17JUN2019	RS	PT

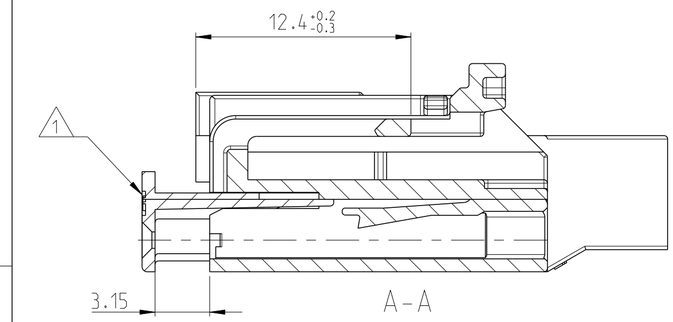

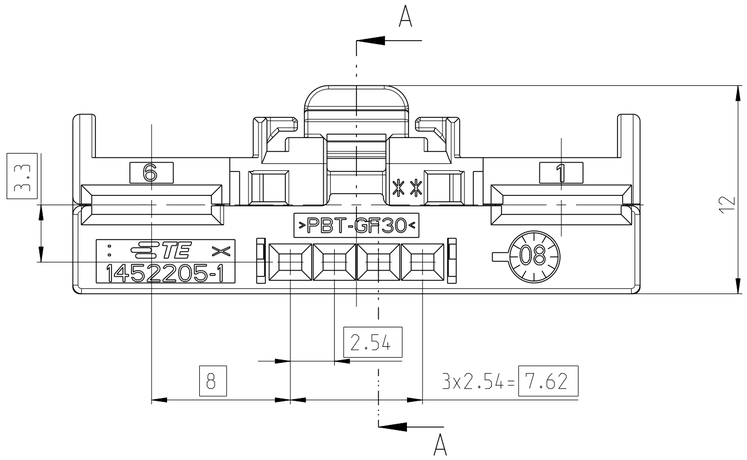

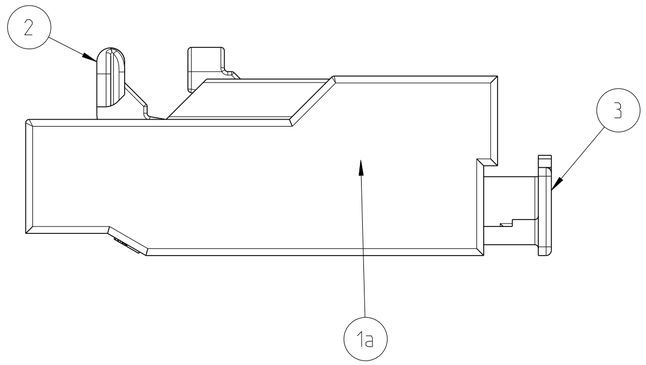

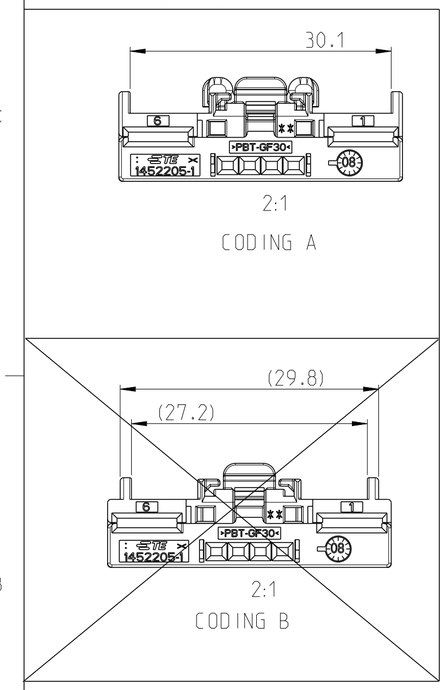

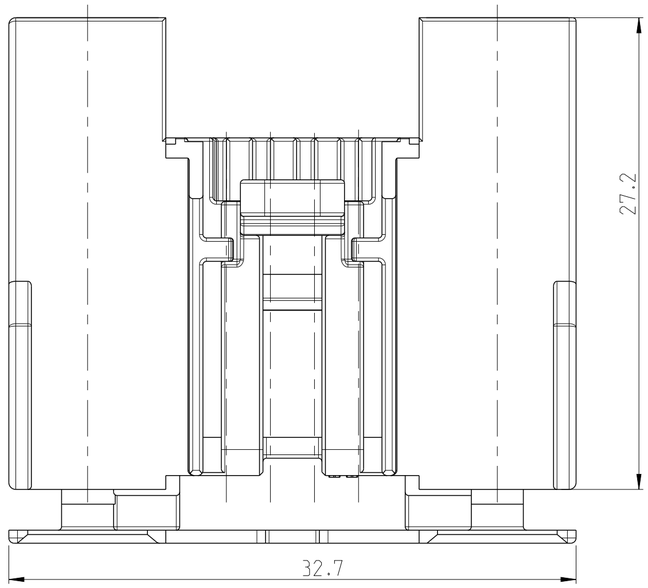

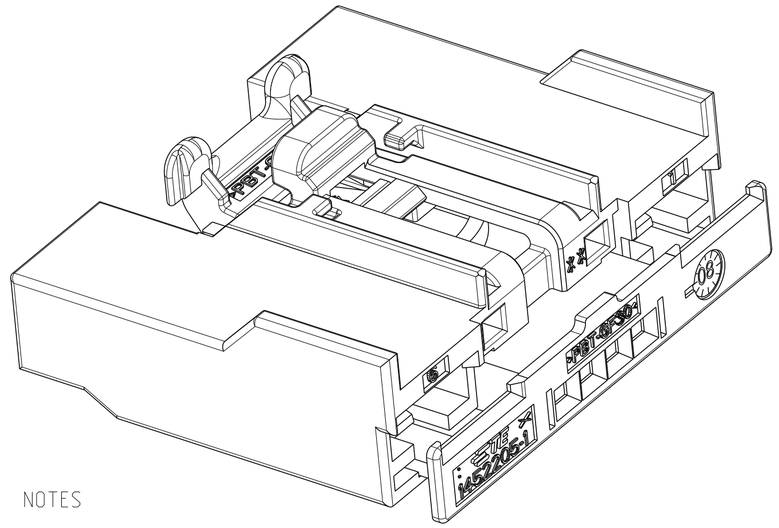

D3

	CODING OPTIONS							
	A		B					
ORDER NUMBER	1452203-1	1-1452203-1 △4	1452203-2	1-1452203-2				
	1	1	1	1	3	SPACER	PBT-GF30	RED
	-	1	-	1	2	CPA	PBT-GF20	RED
	-	-	1	1	1b	SOCKET HOUSING COD. B	PA66-GF35	BLACK
	1	1	-	-	1a	SOCKET HOUSING COD. A	PA66-GF35	BLACK
	QTY				ITEM	DESCRPTION	MATERIAL	COLOR

NOTES

△1 SPACER IN PRE-ASSEMBLED POSITION

2 INTERFACE SPECIFICATION, SEE DRAWING 114-18469

3 PACKING:
CONNECTOR ASSEMBLIES BULK PACKED
INTO CORRUGATED BOXES WITH PLASTIC BAG

D3 △4 ONLY FOR BRAZIL

THIS DRAWING IS A CONTROLLED DOCUMENT.

DIMENSIONS: mm

TOLERANCES UNLESS OTHERWISE SPECIFIED:
0 PLC ±0.3
1 PLC ±0.3
2 PLC ±0.3
3 PLC ±-
4 PLC ±-
ANGLES ±°

MATERIAL -
-

FINISH -
-

DWN M. DAUBER 10JUL2001
CHK -
APVD -
PRODUCT SPEC -
APPLICATION SPEC -
WEIGHT -

TE Connectivity

NAME 6 POS. HYBRID CONNECTOR; 4 X GET TERMINAL AND 2 X 6.3 YAZAKI TERMINAL

SIZE A2 | CAGE CODE 00779 | DRAWING NO C-1452203 | RESTRICTED TO

CUSTOMER DRAWING | SCALE 4:1 | SHEET 1 OF 1 | REV D3

1471-9 (3/13)