THIS DRAWING IS UNPUBLISHED. RELEASED FOR PUBLICATION ,19 .
© COPYRIGHT 19 BY AMP INCORPORATED. ALL RIGHTS RESERVED.

LOC	DIST
AF	50

REVISIONS

P	LTR	DESCRIPTION	DATE	DWN	APVD
	B1	REVISED PER ECR-18-006427	15MAY2018	BW	SV

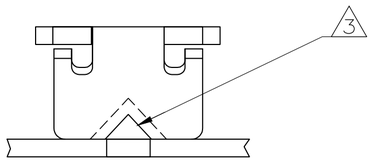

1 CONTINUOUS STRIP ON REELS WITH TERMINALS LOCATED ON 5.59±0.08 [.220±.003] CENTERS.

2 SLOT ACCEPTS 0.36–0.57mm [#27–#23] AWG COPPER MAGNET WIRE. A SINGLE WIRE ONLY.

ALUMINIUM RANGE IS 0.51–0.64mm [#24–#22] AWG ALUMINIUM WIRE RANGE IS APPLICABLE FOR POST TIN PLATED PART NOS ONLY.

3 POKE-IN ACCEPTS A 0.50–0.90mm² [#20–#18] AWG SOLID OR FUSED STRANDED LEAD WIRE.

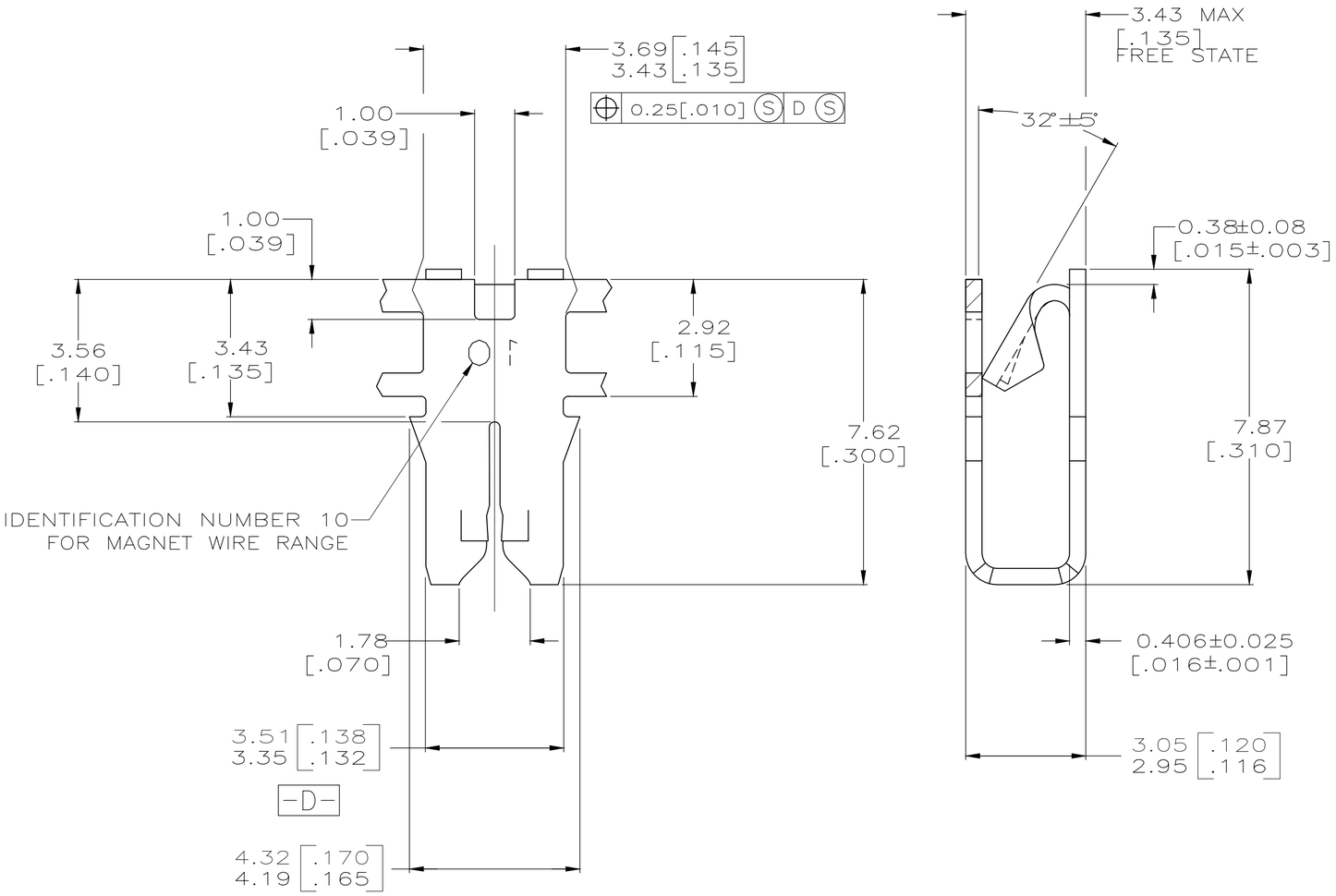

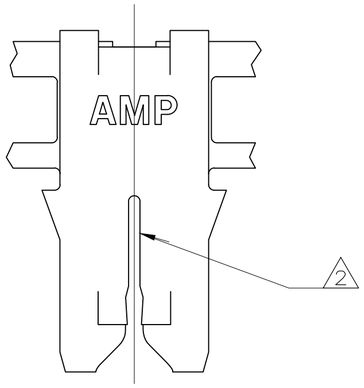

1217182

WITHOUT PAPER	1217182-1
REELING	PART NUMBER

THIS DRAWING IS A CONTROLLED DOCUMENT.

DIMENSIONS: mm [INCHES]

TOLERANCES UNLESS OTHERWISE SPECIFIED:
0 PLC ±–
1 PLC ±–
2 PLC ±0.25[.010]
3 PLC ±–
4 PLC ±–
ANGLES ±–

MATERIAL 4M BRASS

FINISH 0.002032[.000080] MIN TIN PLATE

DWN 26JUL1999 MICHAEL S. FEHER
CHK 26JUL1999 PETE DESANTIS
APVD 26JUL1999 KURT A. RANDOLPH
PRODUCT SPEC 108-2012
APPLICATION SPEC 114-2046
WEIGHT –

CUSTOMER DRAWING

TE CONNECTIVITY

NAME TERMINAL, POKE-IN, 300 SERIES MAG-MATE™

SIZE	CAGE CODE	DRAWING NO	RESTRICTED TO
A2	00779	C- 1217182	–

SCALE 10:1 SHEET 1 OF 1 REV B1