DESCRIPTION: M12 MALE - BOARD MOUNT - 5 POS.

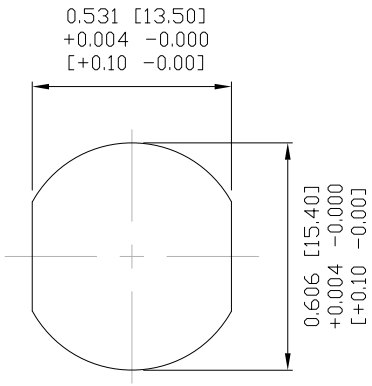

PANEL CUTOUT

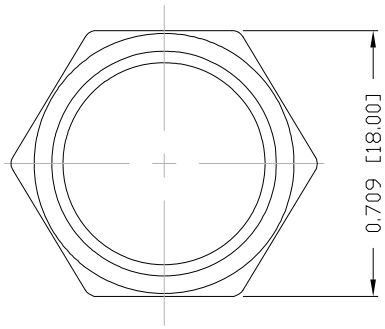

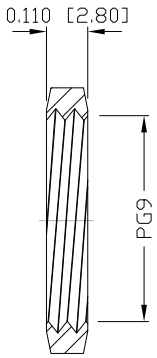

NUT

NOTE:

MATERIAL	
HOUSING:	PBT UL94V-0, BLACK
CONTACT:	BRASS
SHELL:	BRASS
NUT:	BRASS
O-RING A:	EPDM, BLACK
O-RING B:	NBR
FINISH	
CONTACT:	GOLD PLATED OVER 50µ" NICKEL
SHELL:	NICKEL PLATED
NUT:	NICKEL PLATED
ELECTRICAL	
RATED CURRENT:	4A
RATED VOLTAGE:	60V
INSULATION RESISTANCE:	100 MOhms MIN.
CONTACT RESISTANCE:	10 mOhms MAX.
WATER PROOF:	IP67
ENVIRONMENT	
OPERATION TEMPERATURE:	-40°C TO +85°C

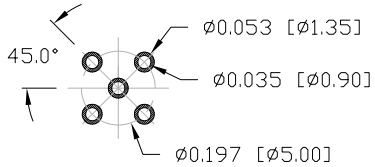

PCB LAYOUT

860-005-113R00Y

3 = BRASS/NICKEL SHELL & NUT
S = STAINLESS STEEL SHELL & NUT

1 = GOLD FLASH
4 = 10u" GOLD

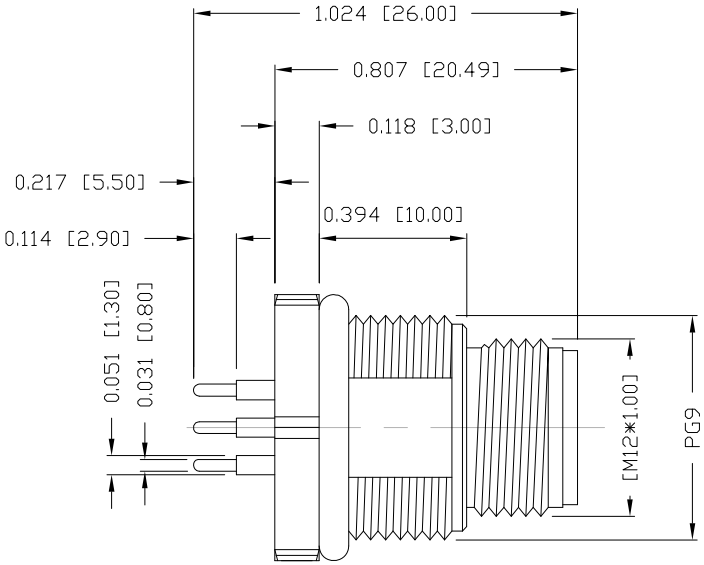

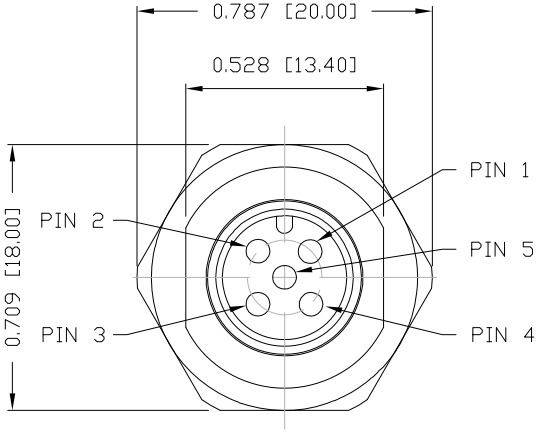

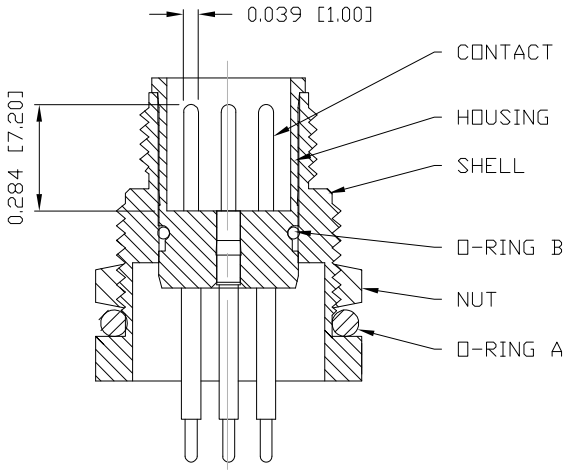

RoHS COMPLIANT

UNITS = INCHES [MM]

DO NOT SCALE FROM DRAWING

THESE DRAWINGS AND SPECIFICATIONS ARE THE PROPERTY OF NorComp AND SHALL NOT BE REPRODUCED, COPIED OR USED AS THE BASIS FOR THE MANUFACTURE OR SALE OF APPARATUS WITHOUT WRITTEN PERMISSION.

DRAWN:	DATE:		SCALE:	SHEET OF	REV
M. SIGMON	03-07-16	NorComp	NTS	1 1	4
			DWG NO. 860-005-113R00Y		