THIS DRAWING IS UNPUBLISHED. RELEASED FOR PUBLICATION 2006
© COPYRIGHT 2006 BY TYCO ELECTRONICS CORPORATION. ALL RIGHTS RESERVED.

| LOC | DIST |
|---|---|
| J | - |

REVISIONS

| P | LTR | DESCRIPTION | DATE | DWN | APVD |
|---|---|---|---|---|---|
| | A | RELEASED | 18JAN2006 | K.S | M.K |
| | B | REVISED | 14JAN2009 | T.K | M.K |
| | B1 | REVISED | 28JUL2009 | S.N | M.K |

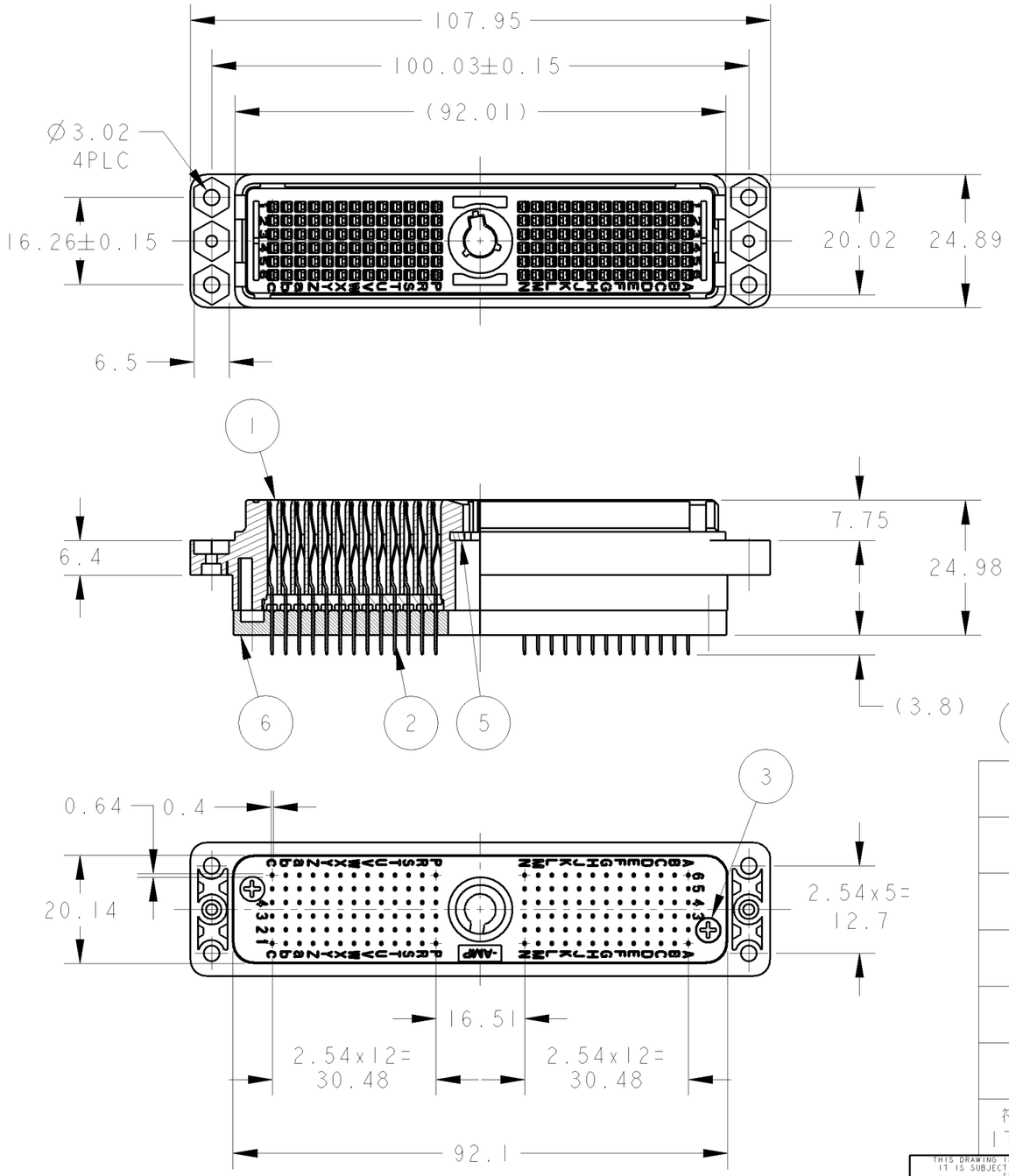


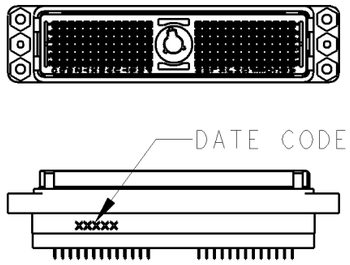


SCALE 1:2

-1;AS SHOWN
本図

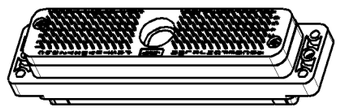

SCALE 1:2

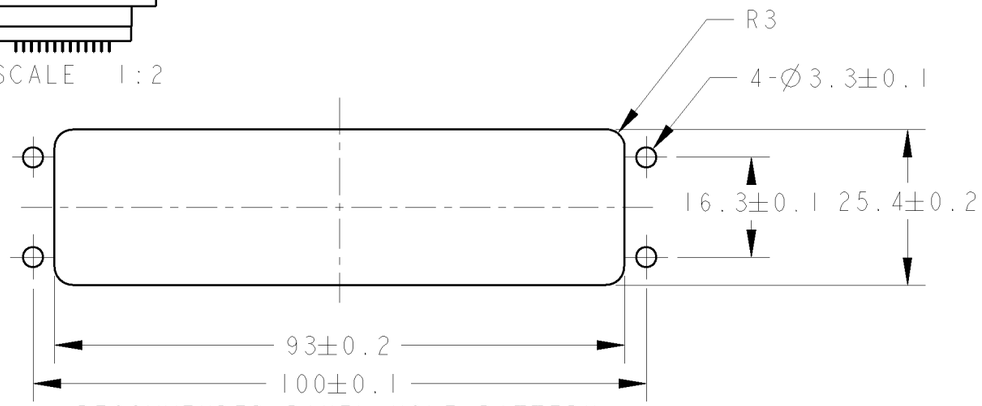


RECOMMENDED PANEL HOLE PATTERN
推奨パネル取付寸法

RoHS COMPLIANT

| 符号 ITEM | 名前 DESCRIPTION | 数量 QTY | 材質 MATERIAL | 仕上げ FINISH | 備考 REMARK |
|---|---|---|---|---|---|
| 6 | アダプタスタビライザ ADAPTER STABILIZER | 1 | 合成樹脂 PLASTIC | 無し NONE | UL94V-0 |
| 5 | メタルプレート METAL PLATE | (1) | ステンレス鋼 STAINLESS STEEL | 無し NONE | |
| 4 | サポートハウジング SUPPORT HOUSING | 12 | 合成樹脂 PLASTIC | 無し NONE | UL94V-0 |
| 3 | タッピングスクリュー TAPPING SCREW L=8 | 2 | 鋼 STEEL | 3価クロメート TRIVALENT CHROMATE | |
| 2 | コンタクト 0.64x0.4 CONTACT | (156) | ベリリウム銅 BERYLLIUM COPPER | ニッケル下地金メッキ Au OVER Ni PL. | |
| 1 | ハウジングリセアッシー HOUSING RECE ASSY | 1 | ナイロン樹脂 NYLON RESIN | 無し NONE | UL94V-0 |

1.PLATING:MATING AREA;1.27μmMIN GOLD OVER 1.27μmMIN NICKEL
SOLDER LEG AREA;GOLD FLASH OVER 1.27μmMIN NICKEL
OTHERS;1.27μmMIN NICKEL

1.めっき:接触部:ニッケル下地1.27μmMINの上に金1.27μmMIN
半田付部:ニッケル下地1.27μmMINの上に金フラッシュ
その他:ニッケル1.27μmMIN

THIS DRAWING IS A CONTROLLED DOCUMENT FOR TYCO ELECTRONICS CORPORATION IT IS SUBJECT TO CHANGE AND THE CONTROLLING ENGINEERING ORGANIZATION SHOULD BE CONTACTED FOR THE LATEST REVISION.

DIMENSIONS: mm

TOLERANCES UNLESS OTHERWISE SPECIFIED: ±0.3
0 PLC ±
1 PLC ±
2 PLC ±
3 PLC ±
4 PLC ±
ANGLES ±3°

MATERIAL SEE TABLE
FINISH SEE TABLE

DWN K.SAKAI 18JAN2006
CHK E.TAKEMASA 18JAN2006
APVD M.KIMURA 18JAN2006
PRODUCT SPEC 108-5483
APPLICATION SPEC -
WEIGHT 73g

Tyco Electronics
Tyco Electronics Corporation
Kawasaki, Japan

NAME
M-ZIF CONN REC ASSY 156P
3.8mm SOLDER TYPE

| SIZE | CAGE CODE | DRAWING NO | RESTRICTED TO |
|---|---|---|---|
| A3 | - | C-5353517 | - |

CUSTOMER DRAWING
SCALE 1:1 SHEET 1 OF 1 REV B1