THIS DRAWING IS UNPUBLISHED.
VERTRAULICHE UNVEROEFFENTLICHTE ZEICHNUNG
© COPYRIGHT 2014 Tyco Electronics AMP GmbH
RELEASED FOR PUBLICATION 2014
FREI FUER VEROEFFENTLICHUNG
ALL RIGHTS RESERVED.
ALLE RECHTE VORBEHALTEN.

MATED WITH:
PASSEND ZU:

PROJEKT NR.: PRJ-14-000000805

REVISIONS
AENDERUNGEN

P	LTR	DESCRIPTION BESCHREIBUNG	DATE	DWN	APVD
	A2	DESCRIPTION CORRECTED FROM SOLDER TO SCREW TERMINAL IN TITLE BLOCK	13NOV2014	CR	JK
	A4	ECR-19-010090	27JUN2019	B.P	C.W

1 MATERIAL: ITEM NO. 1: HOUSING - ZINC DIECASTING, NICKEL PLATED
ITEM NO. 2: CONTACT BODY - PA
ITEM NO. 3: CONTACT FINISH - Au (gold)

2 CONTACT - CuZn (brass)

3 CONTACT - CuSn (bronze)

4 ALL DIMENSIONS ARE FOR NOMINAL REFERENCE ONLY UNLESS OTHERWISE STATED

5 MEASUREMENT REFERENCE ONLY

6 PACKAGING: 1 PIECE IN A BAG

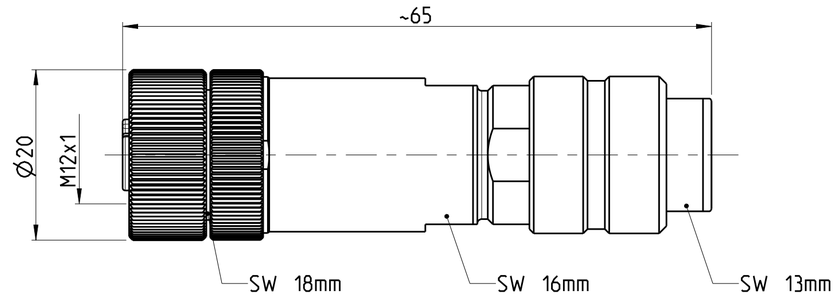

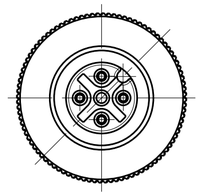

TECHNICAL DATA	3-2271117-2	4-2271117-2	5-2271117-2	6-2271117-2
RATED VOLTAGE	250V	125V	60V	30V
RATED IMPULSE VOLTAGE	2500V	1500V	800V	500V
POLLUTION DEGREE	3	3	3	3
OVERVOLTAGE CATEGORY	II	II	II	II
MATERIAL GROUP	II	II	II	II
RATED CURRENT	4A	4A	2A	2A
VOLUME RESISTIVITY	≤ 3mΩ	≤ 3mΩ	≤ 3mΩ	≤ 3mΩ
DEGREE OF PROTECTION	IP67	IP67	IP67	IP67
UPPER TEMPERATURE	+85 °C	+85 °C	+85 °C	+85 °C
LOWER TEMPERATURE	-40 °C	-40 °C	-40 °C	-40 °C

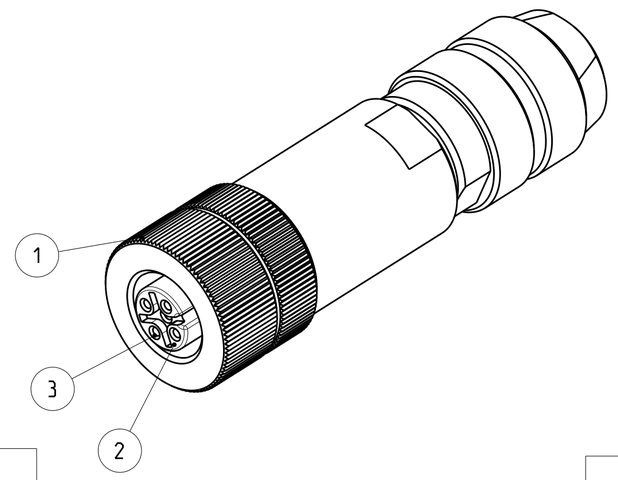

3--2 AS SHOWN
WIE GEZEICHNET

	CABLE FEED-THROUGH mm	WIRES AWG / mm²	MATERIAL	NUMBER OF POLES	TE-PART-NO.
	6-8	24 / 0.25mm²	1 3	12	6-2271117-2
Obsolete	~~5-8~~	~~20 / 0.50mm²~~	~~1 2~~	~~8~~	~~5-2271117-2~~
Obsolete	~~5-8~~	~~18 / 0.75mm²~~	~~1 2~~	~~5~~	~~4-2271117-2~~
Obsolete	~~5-8~~	~~18 / 0.75mm²~~	~~1 2~~	~~4~~	~~3-2271117-2~~

PIN ARRANGEMENT
A-CODING (SCALE 2:1)

3-2271117-2	4-2271117-2	5-2271117-2	6-2271117-2

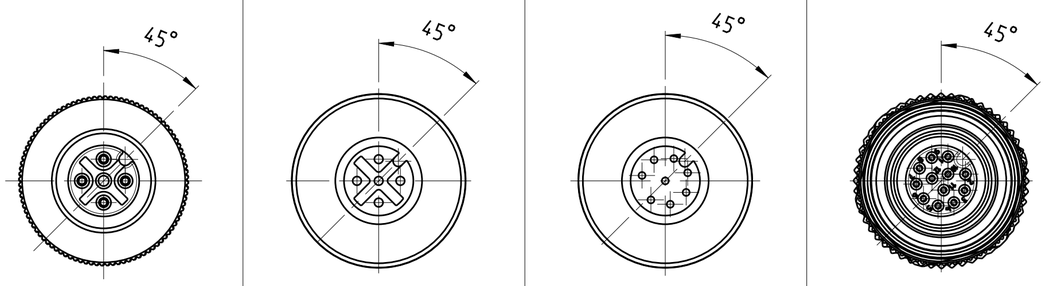

SIZE ISO 14405 (E)

DIESE ZEICHNUNG IST EIN KONTROLLIERTES DOKUMENT.
BEMASSUNGEN UND TOLERANZEN GEMAESS GPS (ISO STANDARDS).
THIS DRAWING IS A CONTROLLED DOCUMENT.
DIMENSIONING AND TOLERANCING PER GPS (ISO STANDARDS).

DIMENSIONS: MASSEINHEITEN: mm

TOLERANCES UNLESS OTHERWISE SPECIFIED: ALLGEMEINTOLERANZEN
0 PLC ±-
1 PLC ±-
2 PLC ±-
3 PLC ±-
4 PLC ±-
ANGLES/WINKEL ±-
FINISH/OBERFLAECHE/FARBE -

MATERIAL - -

DWN YASHKUMAR 17MAY2014
CHK M.STRELOW 17MAY2014
APVD C.SCHRETTLINGER 17MAY2014
PRODUCT SPEC PRODUKTSPEZ. 108-19483
APPLICATION SPEC VERARBEITUNGSSPEZ. 114-32127
WEIGHT GEWICHT -

TE Connectivity

NAME
M12 RECEPTACLE, STRAIGHT, FIELD INSTALLABLE, SHIELDED CONNECTOR, SCREW TERMINAL, A-CODING

SIZE	CAGE CODE	DRAWING NO ZEICHNUNGS-NR.	RESTRICTED TO NUR FUER
A2	00779	C-2271117	-

Customer Drawing /KUNDENZEICHNUNG
SCALE MASSSTAB 2:1 SHEET BLATT 1 OF VON 1 REV A4

1471-9 (3/13)