THIS DRAWING IS UNPUBLISHED. RELEASED FOR PUBLICATION 2015
© COPYRIGHT 2015 TE Connectivity Germany GmbH ALL RIGHTS RESERVED.

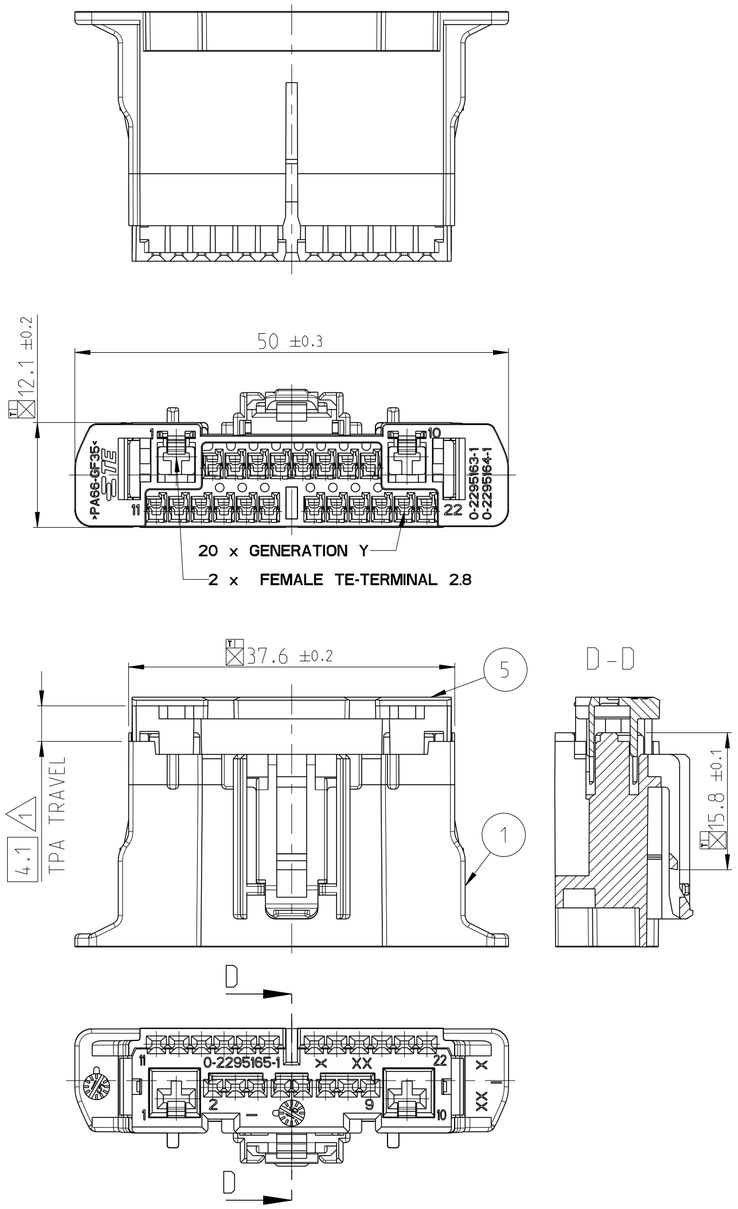

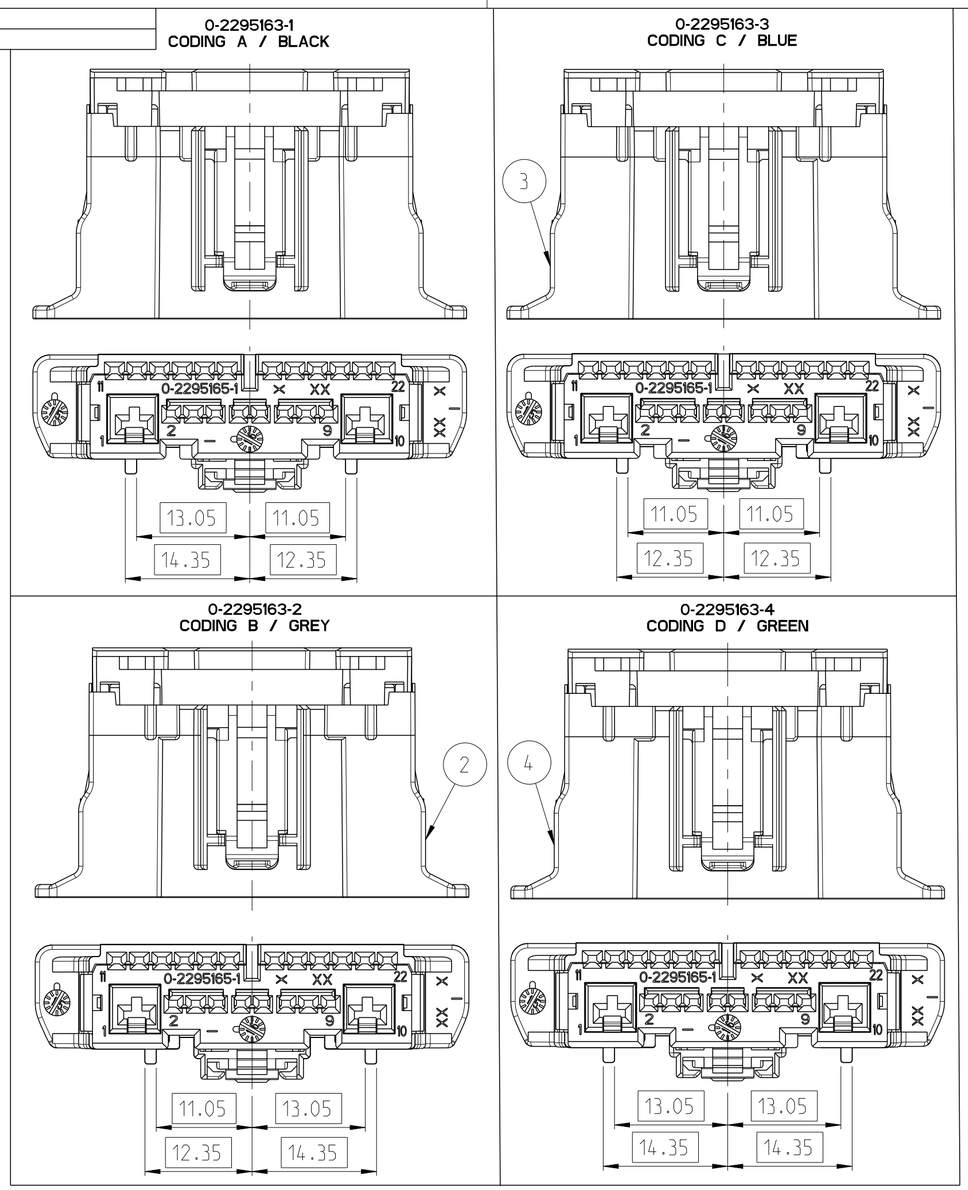

REVISIONS					
P	LTR	DESCRIPTION	DATE	DWN	APVD
	A1	DRAWING UPDATED	18APR2016	GP	KR
	A2	ADD OF COD. 2295163-3 AND -4	12MAY2016	GP	KR
	A3	ECR-17-001537	02FEB2017	GP	KR
	A4	ECR-17-008306	08JUN2017	GP	KR

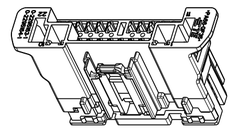

1:1

NOTES:
Bemerkungen:

1. DELIVERY CONDITION: TPA IN PRELOCK POSITION
   Auslieferungszustand: TPA in Vorraststellung
2. PACKAGING: LOOSE PIECES IN CARDBOX
   Verpackung: Schuettgut im Karton
3. TE-INTERFACE-NO.: 114-94384
   TE-Schnittstellen-Nr.: 114-94384
4. FOR APPLICATIONS USING MORE THAN 20V:
   DO NOT HOT MATE / CONNECT OR DISCONNECT CONNECTOR UNDER LOAD
   Fuer Anwendungen ueber 20V: Steckverbindung nicht unter Spannung verbinden oder trennen.
5. CPA CAPABLE
   CPA geeignet
6. TESTED ACCORDING TE-PRODUCT SPECIFICATIN 108-94601 (USCAR 2 - REV 6)
   Getestet nach TE-Produkt Spezifikation 108-94601 (USCAR 2 - Rev 6)

DENOTES BASIC DIMENSIONS HAVE ZERO TOLERANCE AND DESCRIBE THE THEORETICAL.EXACT LOCATION (TRUE POSITION) OF A FEATURE OR CONTUR.
Theoretische Funktionsmasse. sie haben keine Toleranz und geben eine genaue Lage. Funktion oder Kontur an.

SIGNIFICANT CHARACTERS ACC. TO QUALITY MANAGEMENT PROCEDUR (QMP) NO.012
SC- Masse entsprechen dem Qualitaetsanweisungen (QMP) Nr.012

0-2295163-4	0-2295163-3	0-2295163-2	0-2295163-1	PART NO	REV	DESCRIPTION	COLOUR	ITEM NO
1x	1x	1x	1x	0-2295165-1	A	22POS. TPA	RED SIMILAR RAL3000	5
1x				0-2295164-4	A	22POS. RECEPTACLE HOUSING CODING D	GREEN SIMILAR RAL6018	4
	1x			0-2295164-3	A	22POS. RECEPTACLE HOUSING CODING C	BLUE SIMILAR RAL9012	3
		1x		0-2295164-2	A	22POS. RECEPTACLE HOUSING CODING B	GREY SIMILAR RAL7037	2
			1x	0-2295164-1	A	22POS. RECEPTACLE HOUSING CODING A	BLACK SIMILAR RAL9011	1
A	A	A	A	REVISION OF EACH ASSY NO (WHEN BLANK. USE DWG REVISION)				
8.85	8.85	8.85	8.85	WEIGHT OF EACH ASSY NO [g]				
				PARTS LIST				

ADDITIONAL TERMINAL VARIANTS ON REQUEST

APPLICABLE TERMINALS			
0.64 GENERATION Y UNSEALED FEMALE TERMINAL	TIN	2098762-8	0.35mm² / AWG 22
0.64 GENERATION Y UNSEALED FEMALE TERMINAL	TIN	2098762-7	0.13mm² / AWG 26
0.64 GENERATION Y UNSEALED FEMALE TERMINAL	TIN	2098762-6	0.75mm² / AWG 18
0.64 GENERATION Y UNSEALED FEMALE TERMINAL	TIN	2098762-5	0.35-0.50mm² / AWG 20-22
0.64 GENERATION Y UNSEALED FEMALE TERMINAL	TIN	2098762-4	0.35mm² / AWG 22
0.64 GENERATION Y UNSEALED FEMALE TERMINAL	TIN	2098762-3	0.13mm² / AWG 26
0.64 GENERATION Y UNSEALED FEMALE TERMINAL	TIN	2098762-2	0.75mm² / AWG 18
0.64 GENERATION Y UNSEALED FEMALE TERMINAL	TIN	2098762-1	0.35-0.50mm² / AWG 20-22
FEMALE TERMINAL 2.8mm	TIN	1326030-3	AWG 14-16
FEMALE TERMINAL 2.8mm	TIN	1326030-2	AWG 18-20
FEMALE TERMINAL 2.8mm	TIN	1326030-1	AWG 20
DESCRIPTION	PLATING COLOUR	TE CONNECTIVITY PART-NO.	WIRE SIZE

-1 AS SHOWN
wie gezeichnet

THIS DRAWING IS A CONTROLLED DOCUMENT.

DIMENSIONS: mm

TOLERANCES UNLESS OTHERWISE SPECIFIED:
0 PLC ±
1 PLC ±
2 PLC ±
3 PLC ±
4 PLC ±
ANGLES ±1°

MATERIAL -
FINISH -

DWN G.PUCKEL 13AUG2015
CHK K.ROTH 13AUG2015
APVD K.ROTH 08JUN2017
PRODUCT SPEC 108-94601
APPLICATION SPEC 114-94484
WEIGHT SEE TABLE

TE Connectivity

NAME 22 POS. LIGHT CONTROL PLUG ASSEMBLY
20 x GENERATION Y , 2 x TE 2.8
-

SIZE	CAGE CODE	DRAWING NO	RESTRICTED TO
A2	00779	C-2295163	-

CUSTOMER DRAWING | SCALE 2:1 | SHEET 1 OF 1 | REV A4

1471-9 (3/13)