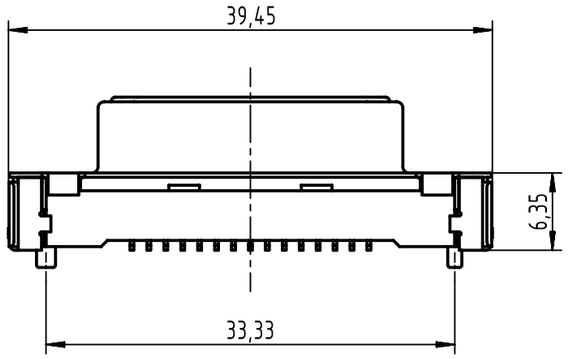

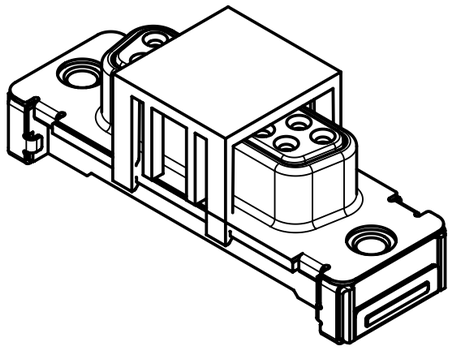

Load vacuum cover

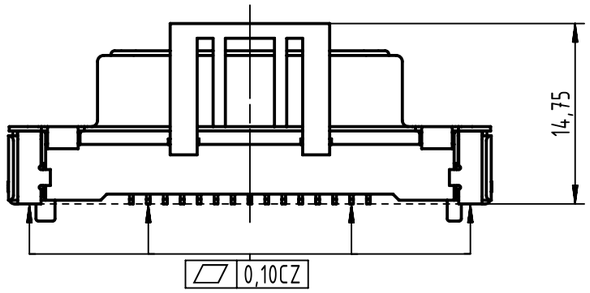

(All contacts and grounds)

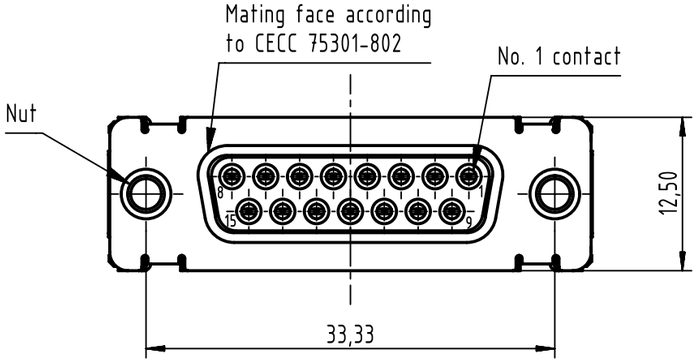

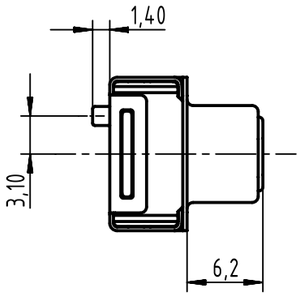

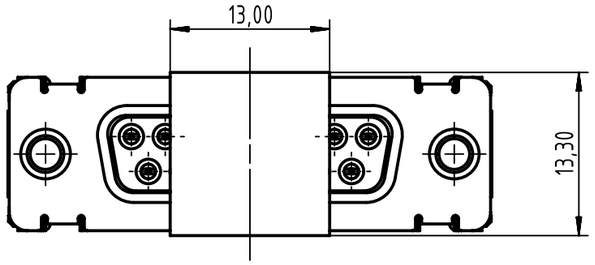

PCB layout, component side

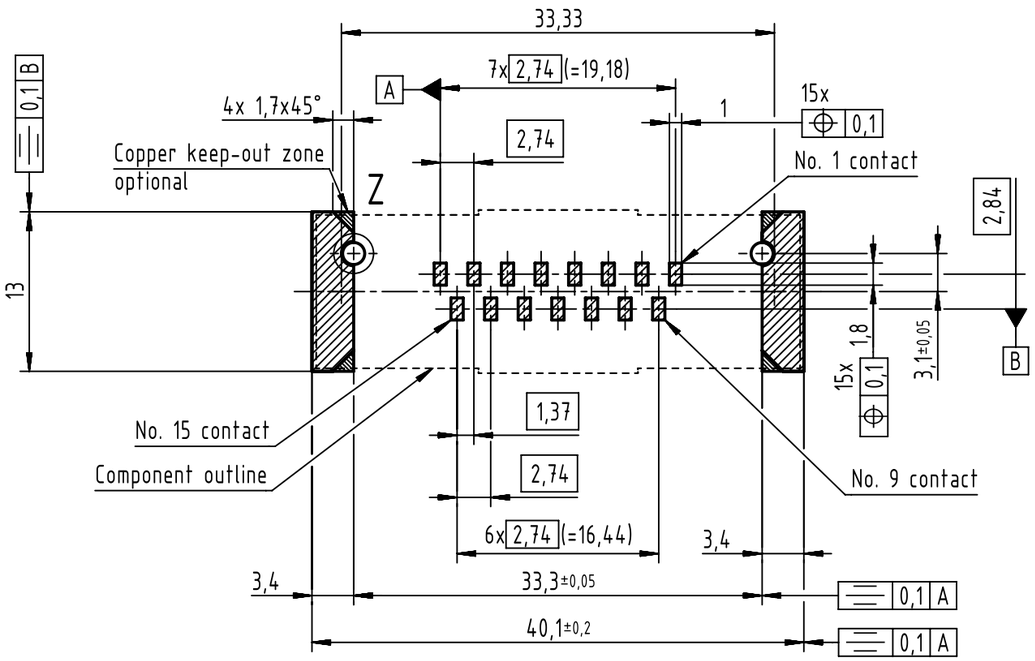

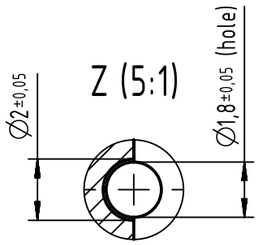

Max. Temperature: 260°C during 10 seconds.
Find further technical information on DS 09550200302.

Part number	PL	Nut	Index designation	
0955 215 6612 333	2	4-40 UNC	Black insulator	Samples
0955 215 3612 741	1			Reel packaging (140 connectors)
0955 215 6612 741	2			
0955 215 7612 741	3			
0955 215 3611 741	1	M3		
0955 215 6611 741	2			
0955 215 7611 741	3			

All Dimensions in mm
Original Size DIN A3

Scale	Free size tol.	Ref.
2:1		Sub.

All rights reserved

Department EL PD

HARTING Electronics GmbH
D-32339 Espelkamp

Created by	Inspected by	Standardisation	Date	State
ZHUANGJ	LUOK	HOFFMANN	2018-11-29	Final Release

Title: D-Sub str SMT 15-pole fem ass with screw nut & pad

Doc-Key / ECM-Nr.: 100236643/UGD/001/C 500000139800

Type: TB | Number: 0955215X61X | Rev.: C | Page: 1/1

A3