Unpublished copy-not to be reproduced nor published without written permission of AMP Incorporated

PART NUMBER	KEYING POSITION
204708-1	01
-2	02
-3	03
-4	04
-5	05
-6	06
-7	07
-8	08
-9	09
1- -1	01
1- -4	04

REVISION RECORD

	O	RELEASED WAS 5048-417		9-22-69	
	A	REV. PER. ECN A-294 A-319		1-8-70	
	B	REV. PER ECN A-528		5/1/70	
	C	ADDED 1-1&1--4 ECN J-843		10/15/70	
	D	ECO-09-009005	PY	5-09	DE
	E	ECO-10-003957	PY	3-10	DE

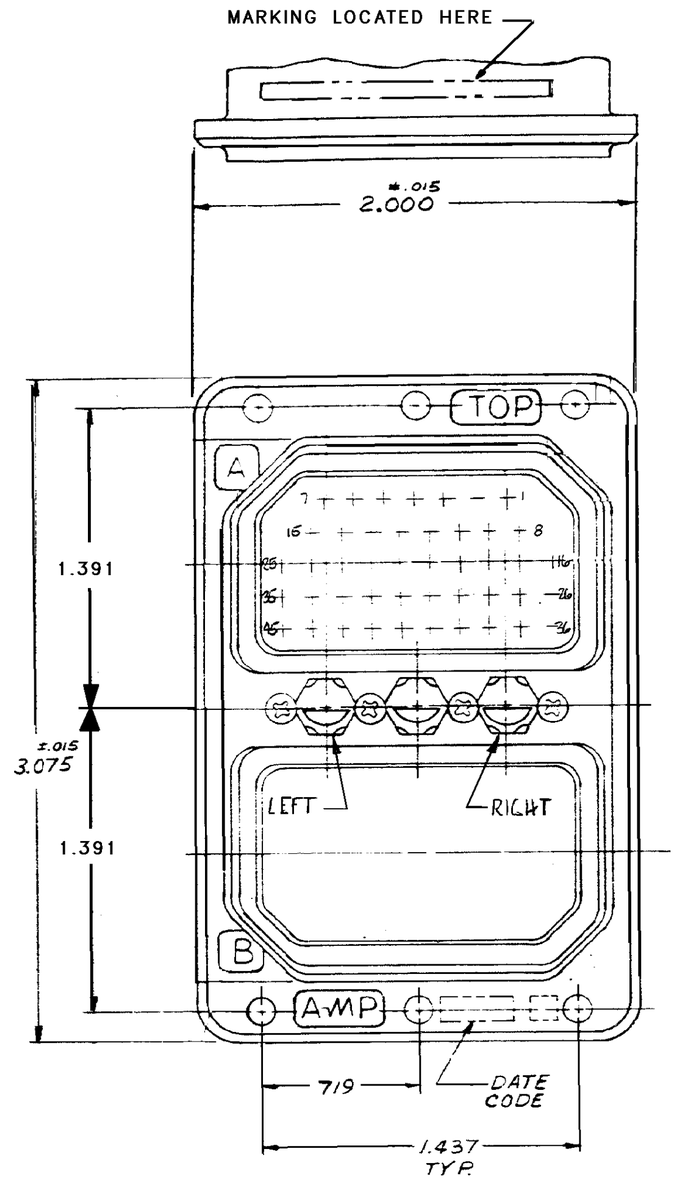

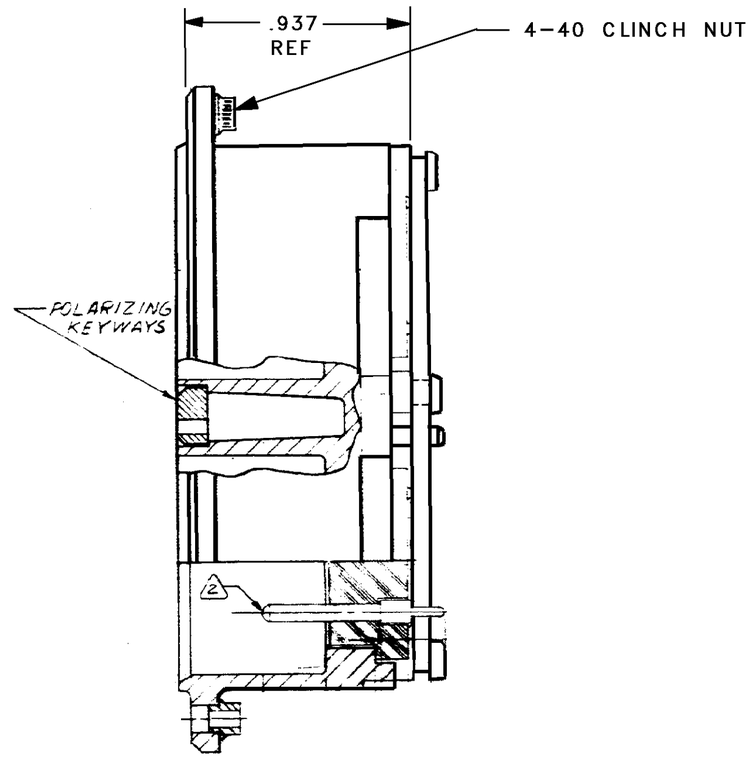

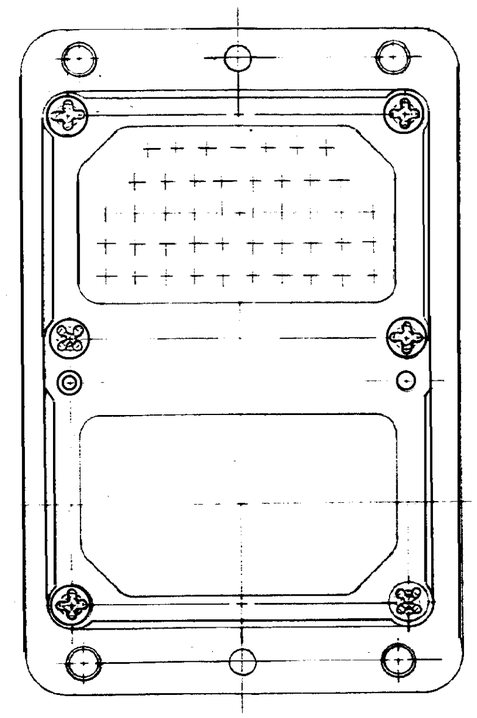

NOTES:

2 CONTACTS ARE SHOWN IN POSITION FOR ILLUSTRATION ONLY. FOR SHIPMENT, CONTACTS ARE INSTALLED IN INSULATOR & PIN PROTECTOR COVER PLACED OVER CONTACTS & ARE INCLUDED IN A CONTAINER WITHIN THE CONNECTOR PACKAGE.

MATERIAL & FINISH

SHELL: DIE CAST ALUMINUM ALLOY PER FED. SPEC. QQ-A-591, COMP. 10.
FINISH: (-1 TO -9) BLACK ANODIZE
FINISH: (1--1 & 1--4) CADMIUM PLATE, YELLOW CHROMATE CONVERSION

SCREWS: STAINLESS STEEL, PASSIVATED
WASHER: PHENOLIC
INSULATORS HARD: EPOXY
POLARIZING KEY INSERTS: STAINLESS STEEL, PASSIVATED

TOLERANCES .XXX .005 ANGLES 2 DEGREES		AMP INCORPORATED
MATERIAL SEE CALLOUT	R S Miller 10-9-69	INSTALLATION, ELECTRICAL CONNECTOR, RECEPTACLE RACK&PANEL AM2R45P45P
	D. Ringley 10-9-69	
	David T. Rundle 10/9/69	
		C / 00779 / 204708 / REV E
		2-1 / SHEET

CUSTOMER DRAWING