THIS DRAWING IS UNPUBLISHED. RELEASED FOR PUBLICATION 20
© COPYRIGHT 20 BY TYCO ELECTRONICS CORPORATION, ALL RIGHTS RESERVED.

LOC	DIST
GP	00

REVISIONS

P	LTR	DESCRIPTION	DATE	DWN	APVD
	A	RELEASED	24JUN2008	RG	DO

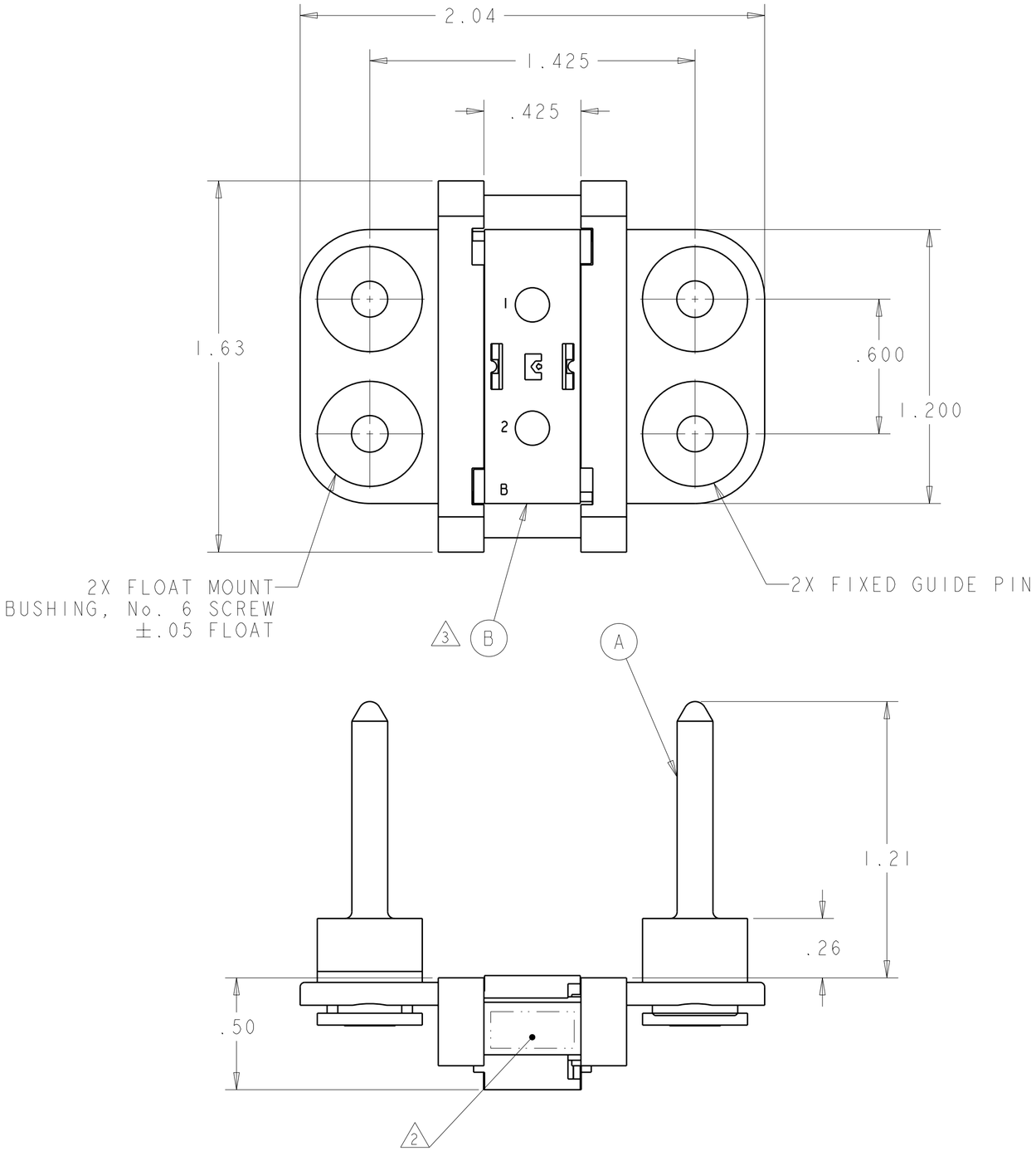

1. PART NUMBER CHANGES AND/OR DESIGN CHANGES AFFECTING ITEM INTERCHANGEABILITY REQUIRE TYCO ELECTRONICS APPROVAL AND AUTHORIZATION BY REVISION TO THIS DRAWING.

2. ITEMS PROVIDED TO THIS SPECIFICATION TO BE PERMANENTLY IDENTIFIED PER THE FOLLOWING IDENTIFIER:

YEAR WEEK

TYCO ELECTRONICS P/N — XXXXXXX-X

DATE CODE (e.g. 0225) — XXXX

3. MODULES ARE FOR CRIMP STYLE REMOVABLE CONTACTS (ITEM C). THEY ARE PACKAGED SEPARATELY WITH AN INSERTION/ REMOVAL TOOL AND WILL BE SHIPPED LOOSE WITH THE ASSEMBLY.

4. MOUNTING FLANGE BUSHING ACCEPTS 6/32 SCREW (Ø.156 CLEARANCE HOLE, FLOAT MOUNT) OR 8/32 SCREW (Ø.173 CLEARANCE HOLE, FIXED MOUNT) USER SUPPLIED.

-1	PART NO.	DESCRIPTION	ITEM
2	1766192-1	PIN CONTACT, SIZE No. 8, CRIMP	C
1	1648462-1	MODULE "B"	B
2	6648251-1	END CAP, GUIDE PIN, FLOAT	A

THIS DRAWING IS A CONTROLLED DOCUMENT FOR TYCO ELECTRONICS CORPORATION. IT IS SUBJECT TO CHANGE AND THE CONTROLLING ENGINEERING ORGANIZATION SHOULD BE CONTACTED FOR THE LATEST REVISION.

DIMENSIONS: INCHES

TOLERANCES UNLESS OTHERWISE SPECIFIED:
0 PLC ±-
1 PLC ±-
2 PLC ±.02
3 PLC ±.010
4 PLC ±-
ANGLES ±5

MATERIAL -
FINISH -

DWN R.GRZYBOWSKI 11JUN2008
CHK D.ORRIS 11JUN2008
APVD S.FLICKINGER 11JUN2008
PRODUCT SPEC -
APPLICATION SPEC -
WEIGHT -

Tyco Electronics
Tyco Electronics
Harrisburg, PA 17105-3608

NAME
PIN CONNECTOR
DOMINO
W/ PANEL CUT-OUT

SIZE	CAGE CODE	DRAWING NO	RESTRICTED TO
A2	00779	C-1926854	-

CUSTOMER DRAWING | SCALE 3:1 | SHEET 1 OF 2 | REV A

ELCON DOMINO

AMP 1471-9 REV 31MAR2000

Pro/ENGINEER DRAWING

THIS DRAWING IS UNPUBLISHED. RELEASED FOR PUBLICATION 20
© COPYRIGHT 20 BY TYCO ELECTRONICS CORPORATION, ALL RIGHTS RESERVED.

LOC	DIST
GP	00

REVISIONS

P	LTR	DESCRIPTION	DATE	DWN	APVD
	-	SEE SHEET 1	-	-	-

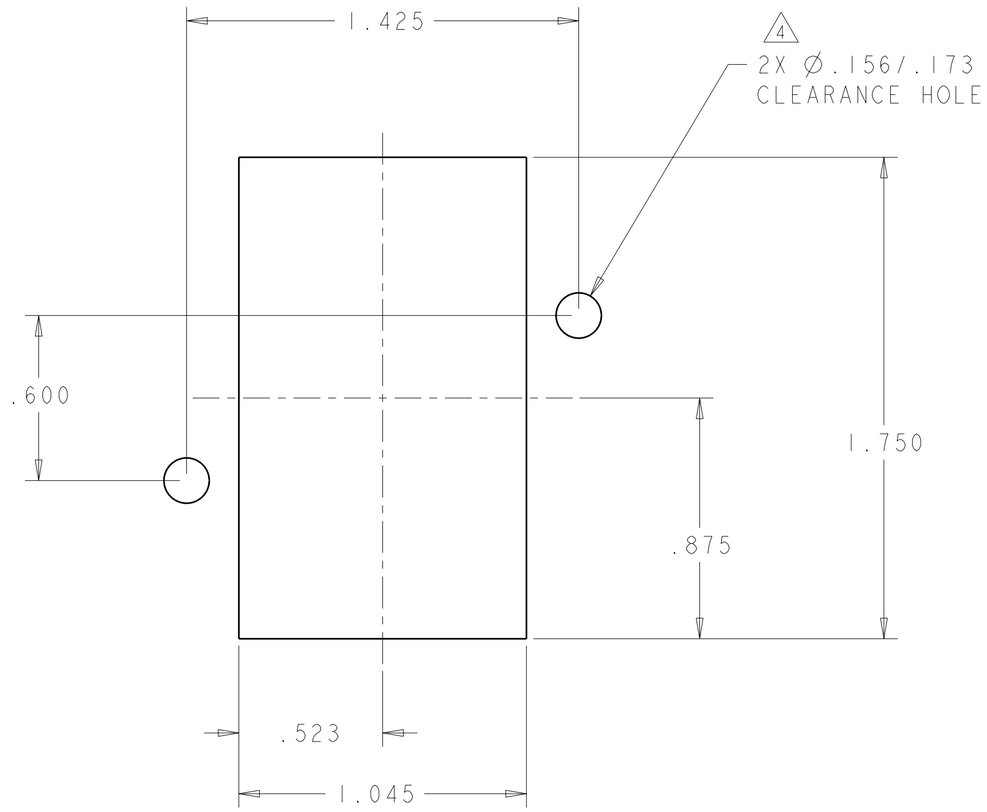

PIN CONNECTOR PANEL CUT-OUT

THIS DRAWING IS A CONTROLLED DOCUMENT FOR TYCO ELECTRONICS CORPORATION. IT IS SUBJECT TO CHANGE AND THE CONTROLLING ENGINEERING ORGANIZATION SHOULD BE CONTACTED FOR THE LATEST REVISION.

DIMENSIONS: INCHES

TOLERANCES UNLESS OTHERWISE SPECIFIED:

0 PLC	±-
1 PLC	±-
2 PLC	±.02
3 PLC	±.010
4 PLC	±-
ANGLES	±5

MATERIAL -

FINISH -

DWN R.GRZYBOWSKI 11JUN2008
CHK D.ORRIS 11JUN2008
APVD S.FLICKINGER 11JUN2008

PRODUCT SPEC -

APPLICATION SPEC -

WEIGHT -

Tyco Electronics

Tyco Electronics
Harrisburg, PA 17105-3608

NAME
PIN CONNECTOR
DOMINO
W/ PANEL CUT-OUT

SIZE	CAGE CODE	DRAWING NO	RESTRICTED TO
A2	00779	C-1926854	-

CUSTOMER DRAWING

SCALE	SHEET	OF	REV
3:1	2	2	A