Jan.1.2022 Copyright 2022 HIROSE ELECTRIC CO., LTD. All Rights Reserved.
In case of consideration for using Automotive equipment / device which demand high reliability, kindly contact our sales window correspondents.

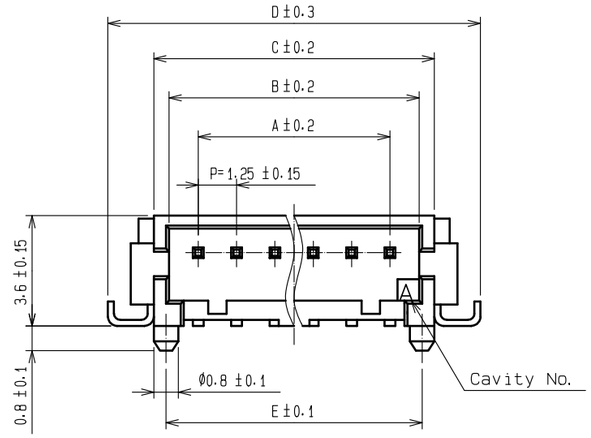

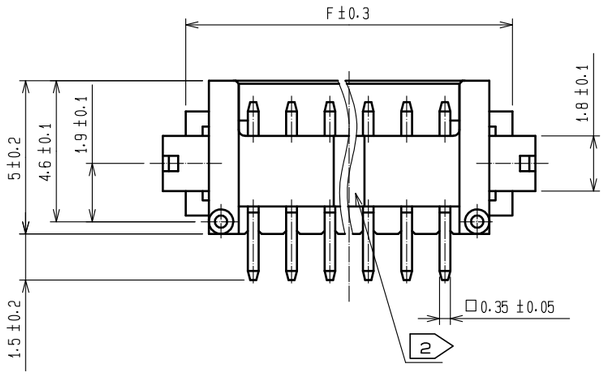

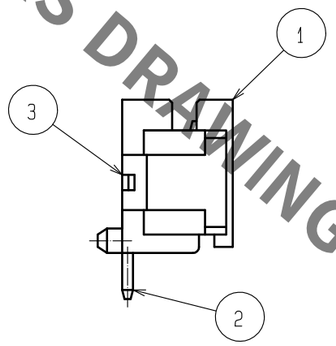

Code No.	Parts No.	Number of Contact	A	B	C	D	E	F
CL536-0251-1-76	DF13- 2P-1.25H(76)	2	1.25	3.15	4.15	7.15	3.35	5.65
CL536-0252-4-76	DF13- 3P-1.25H(76)	3	2.5	4.4	5.4	8.4	4.60	6.9
CL536-0253-7-76	DF13- 4P-1.25H(76)	4	3.75	5.65	6.65	9.65	5.85	8.15
CL536-0254-0-76	DF13- 5P-1.25H(76)	5	5.0	6.9	7.9	10.9	7.10	9.40
CL536-0255-2-76	DF13- 6P-1.25H(76)	6	6.25	8.15	9.15	12.15	8.35	10.65
CL536-0256-5-76	DF13- 7P-1.25H(76)	7	7.5	9.4	10.4	13.4	9.60	11.9
CL536-0257-8-76	DF13- 8P-1.25H(76)	8	8.75	10.65	11.65	14.65	10.85	13.15
CL536-0258-0-76	DF13- 9P-1.25H(76)	9	10.0	11.9	12.9	15.9	12.1	14.4
CL536-0259-3-76	DF13-10P-1.25H(76)	10	11.25	13.15	14.15	17.15	13.35	15.65
-	DF13-11P-1.25H(76)	11	12.5	14.4	15.4	18.4	14.6	16.9
CL536-0261-5-76	DF13-12P-1.25H(76)	12	13.75	15.65	16.65	19.65	15.85	18.15
CL536-0263-0-76	DF13-14P-1.25H(76)	14	16.25	18.15	19.15	22.15	18.35	20.65
CL536-0264-3-76	DF13-15P-1.25H(76)	15	17.5	19.4	20.4	23.4	19.6	21.9

RECOMMENDED PATTERN

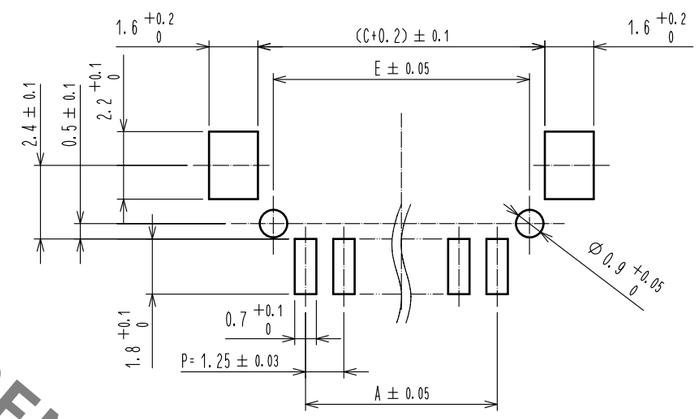

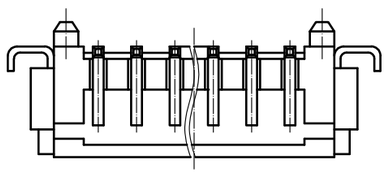

1 Mated connectors

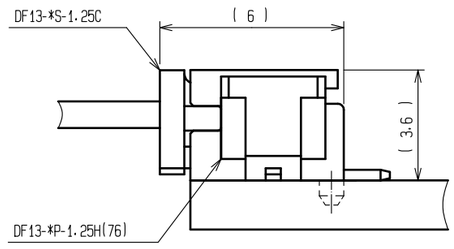

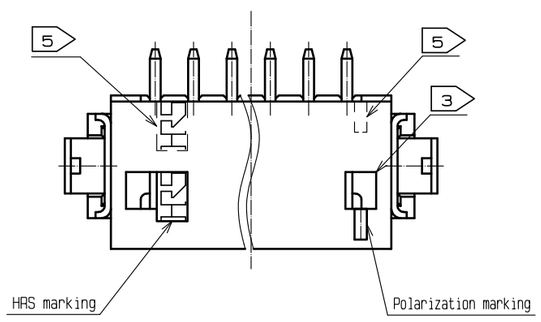

Notes 1 :When this connector mates with DF13-*S-1.25C the mating height is 3.6mm.
2 :There shall be standoff more than five contacts.
3 :When this connector has two or three contacts, the lock shall be set at the center of housing. If more than four, the two locks shall be set as shown on this drawing.
4 :Flatness of lead with reinforced metal fittings shall be within 0.1mm.
5 :When this connector has more than seven contacts, HRS marking and polarization marking shift to the place indicating dotted lines.

NO.	MATERIAL	FINISH , REMARKS	NO.	MATERIAL	FINISH , REMARKS
2	Brass	Surface plating:Gold plated 0.2μm min Under plating:Nickel platde 0.5μm min	5	Elastomer	Stopper, Gray
			4	R. PVC	Tube, Clear
1	Polyamide	Beige(Natural), UL94V-0	3	Phosphor bronze	Surface plating:Tin plated 1μm min

UNITS	SCALE	COUNT	DESCRIPTION OF REVISIONS	DESIGNED	CHECKED	DATE
mm	5 : 1	0				

HRS HIROSE ELECTRIC CO., LTD.

APPROVED	HS. OKAWA	18. 03. 16
CHECKED	TS. FUKUSHIMA	18. 03. 16
DESIGNED	TS. KUMAZAWA	18. 03. 16
DRAWN	MK. INOUE	18. 03. 01

DRAWING NO. EDC-083662-76-00
PART NO. DF13-*P-1.25H(76)
CODE NO. CL536-
0 1/2

HRS DRAWING FOR REFERENCE

Jan.1.2022 Copyright 2022 HIROSE ELECTRIC CO., LTD. All Rights Reserved.
In case of consideration for using Automotive equipment / device which demand high reliability, kindly contact our sales window correspondents.

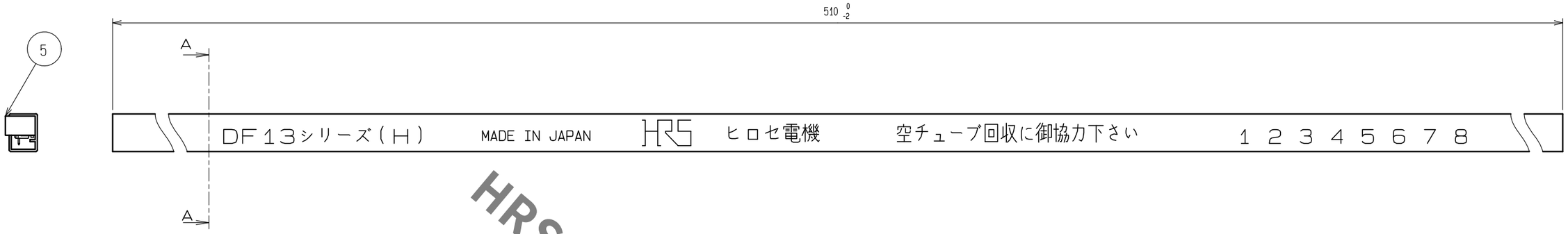

HRS DRAWING FOR REFERENCE

Code No.	Parts No.	Quantity of connector
CL536-0251-1-76	DF13- 2P-1.25H(76)	67
CL536-0252-4-76	DF13- 3P-1.25H(76)	57
CL536-0253-7-76	DF13- 4P-1.25H(76)	49
CL536-0254-0-76	DF13- 5P-1.25H(76)	44
CL536-0255-2-76	DF13- 6P-1.25H(76)	39
CL536-0256-5-76	DF13- 7P-1.25H(76)	36
CL536-0257-8-76	DF13- 8P-1.25H(76)	33
CL536-0258-0-76	DF13- 9P-1.25H(76)	30
CL536-0259-3-76	DF13-10P-1.25H(76)	28
-	DF13-11P-1.25H(76)	26
CL536-0261-5-76	DF13-12P-1.25H(76)	24
CL536-0263-0-76	DF13-14P-1.25H(76)	21
CL536-0264-3-76	DF13-15P-1.25H(76)	20

A-A(10:1)

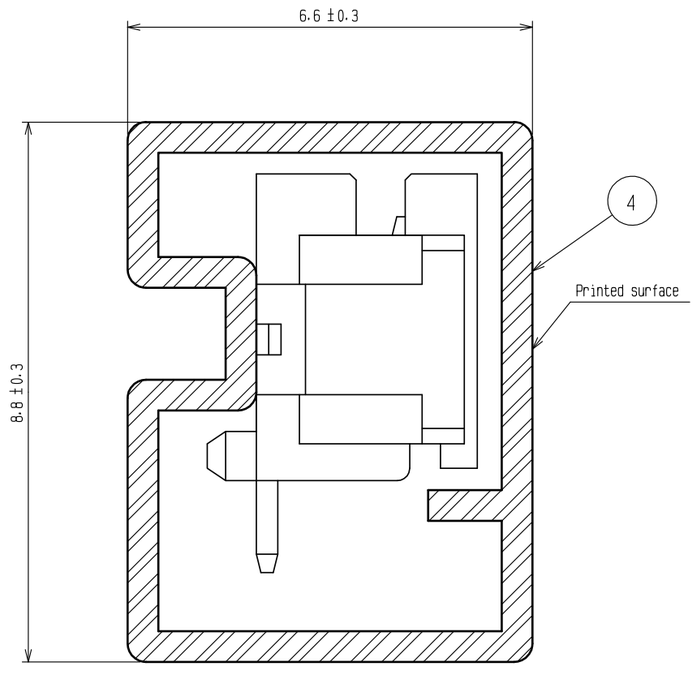

Notes 6 : The tube has one stopper at each end.
7 : Warpage of the tube shall be allowed ±0.2mm per 510mm.
8 : Minimum unit of purchase shall be the quantity of connectors in tube.

HRS	DRAWING NO.	EDC-083662-76-00
	PART NO.	DF13-*P-1.25H(76)
	CODE NO.	CL536- △0 2/2