Alle Rechte vorbehalten/ *All rights reserved*

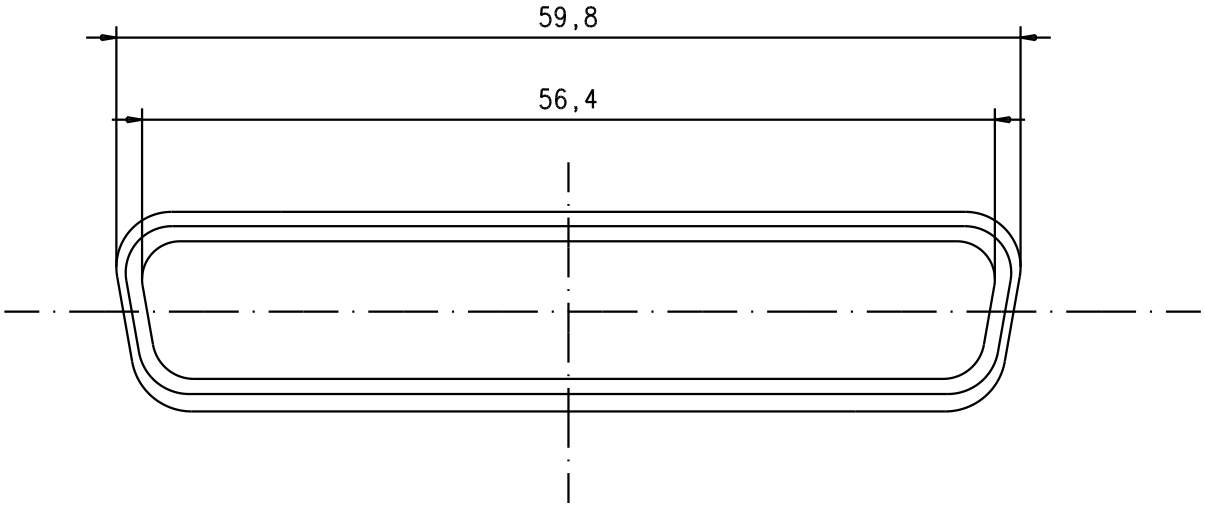

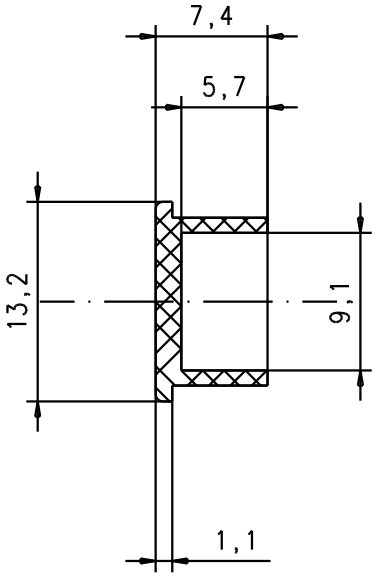

				Dat.	Name			Maßstab/ *Scale*
			Detail.	22/09/04	*T.R.*	All Dim. in mm Orig. Size DIN A 4	black antistatic plastic dust cap for D-sub male 37 poles	2:1
			Insp.					
			Stand.					
32230	22/09/04	*T.R.*	HARTING EURL F-95972 Paris				TB 09670370612	Blatt/ *Page* 1/1
Mod.	Dat.	Name					Sub.	