THIS DRAWING IS UNPUBLISHED. RELEASED FOR PUBLICATION -,- .
© COPYRIGHT - By - ALL RIGHTS RESERVED.

REVISIONS

P	LTR	DESCRIPTION	DATE	DWN	APVD
	C4	REVISED PER ECR-22-126744	20JAN2022	KS	DZ

②	HEADER HOSING	6/6 NYLON GRASS FILLED/ NYLON 6
①	TAB	COPPER ALLOY TIN PLATED
NO.	NAME	MATERIAL

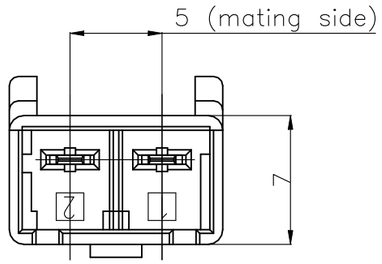

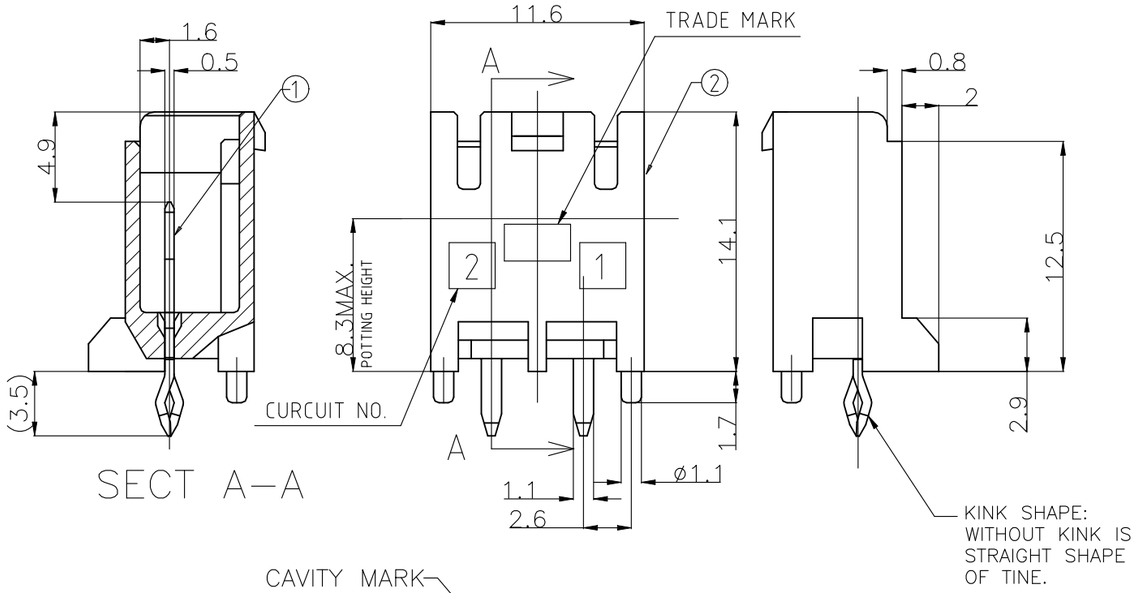

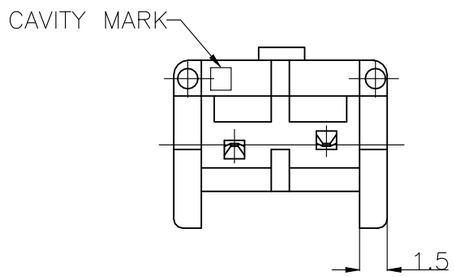

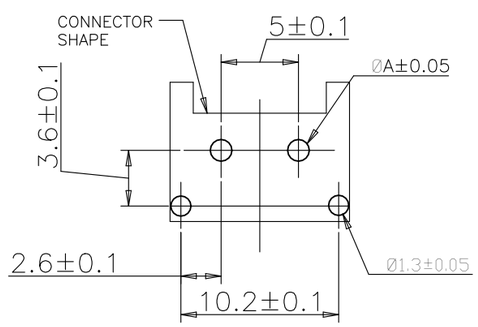

PUNCHING	1.25
DRILLING	1.4
	DIM A

△1 PRINTED CIRCUIT BOARD RECOMMENDED HOLES

△1 RECOMMENDED P.C.B LAY OUT.

2 APPLICABLE P.C.B. THICKNESS:1.6.

△3 MATING CONN. P/N
PLUG HOUSING :SEE TABLE.

4 PARTS COMPLY WITH GLOW WIRE REQUIREMENT FOR PARTS OF NON-METALLIC MATERIAL SUPPORTING A CURRENT-CARRYING CONNNECTION DETAILED IN IEC 60335-1, SECTION 30(GWT).

△5 NYLON 6, GWT, V-2.

△6 NYLON 66, GWT, V-0.

△7 HIGH CURRENT RATING VERSION.

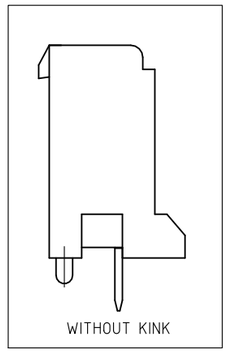

THE TYPE OF KEYING

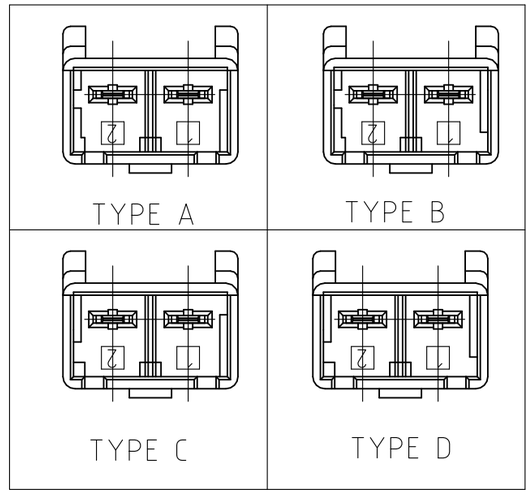

△7 △6	2-1376388-3	WITH KINK	TYPE C	BLUE	2POS	2-1376382-6
△7 △6	1376388-1	WITH KINK	TYPE A	NATURAL	2POS	1376382-6
△5	1376388-5	WITH KINK	TYPE A	NATURAL	2POS	1376382-5
△6	3-1376388-4	WITHOUT KINK	TYPE D	YELLOW	2POS	8-1376382-4
△6	2-1376388-3	WITHOUT KINK	TYPE C	BLUE	2POS	7-1376382-3
△6	1-1376388-2	WITHOUT KINK	TYPE B	RED	2POS	6-1376382-2
△6	1376388-1	WITHOUT KINK	TYPE A	NATURAL	2POS	5-1376382-1
△6	3-1376388-4	WITH KINK	TYPE D	YELLOW	2POS	3-1376382-4
△6	2-1376388-3	WITH KINK	TYPE C	BLUE	2POS	2-1376382-3
△6	1-1376388-2	WITH KINK	TYPE B	RED	2POS	1-1376382-2
△6	1376388-1	WITH KINK	TYPE A	NATURAL	2POS	1376382-1
	MATING CONN. P/N △3	KINK EXISTENCE WITH/WITHOUT KINK	TYPE OF KEYING	COLOR	POS	PART NO.

THIS DRAWING IS A CONTROLLED DOCUMENT.

DIMENSIONS: MM

TOLERANCES UNLESS OTHERWISE SPECIFIED:
0 PLC ± 0.2
1 PLC ±
2 PLC ±
3 PLC ±
4 PLC ±
ANGLES ± 1°

MATERIAL: SEE TABLE

FINISH: SEE TABLE

DWN	A.OISHI	28AUG'00
CHK	Y.KASHIWA	28AUG'00
APVD	Y.KASHIWA	28AUG'00
PRODUCT SPEC	108-5699	
APPLICATION SPEC	114-5292	
WEIGHT		

WIRE RANGE	INSULATION DIA
—	—

TE Connectivity

NAME: 5.0 POWER KEY CONNECTOR 2P HEADER ASSEMBLY

SIZE	CAGE CODE	DRAWING NO	RESTRICTED TO
A3	00779	C-1376382	—

CUSTOMER DRAWING | SCALE 3:1 | SHEET 1 OF 2 | REV C4

THIS DRAWING IS UNPUBLISHED. RELEASED FOR PUBLICATION -,- .
© COPYRIGHT - By - ALL RIGHTS RESERVED.

REVISIONS

P	LTR	DESCRIPTION	DATE	DWN	APVD
	—	SEE SHEET 1	—	—	—

②	HEADER HOSING	6/6 NYLON
①	TAB	COPPER ALLOY TIN PLATED
NO.	NAME	MATERIAL

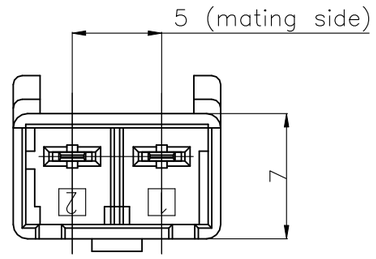

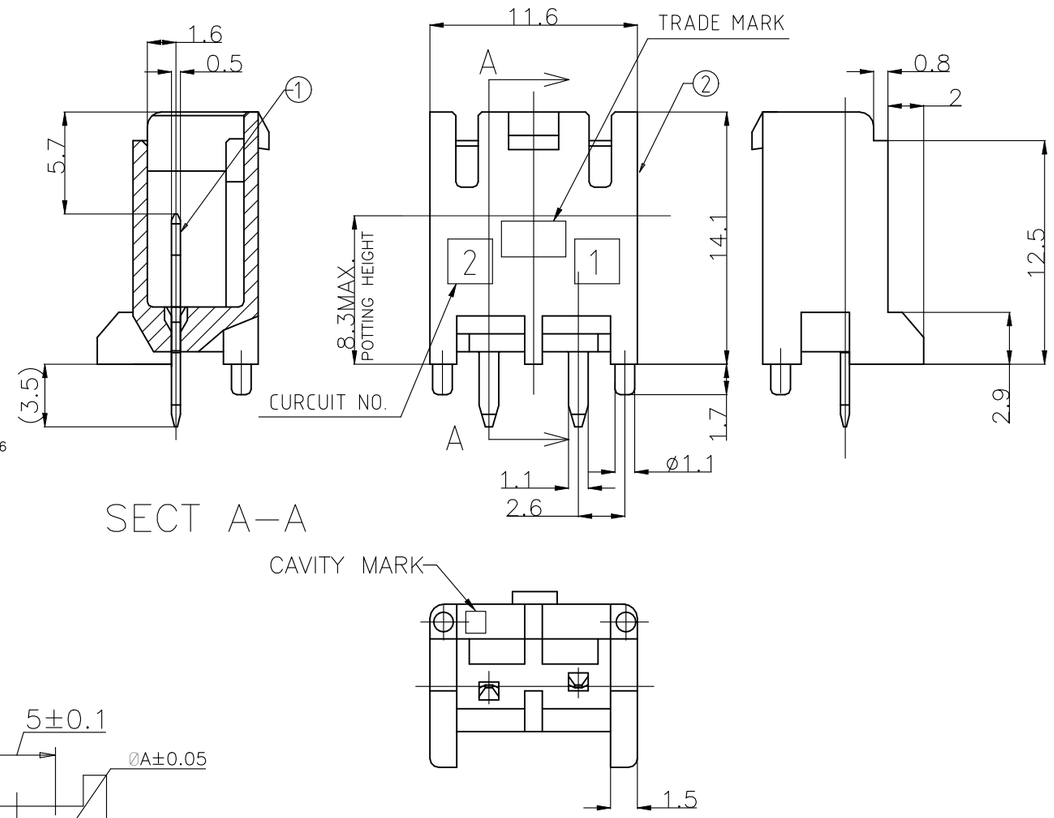

SECT A–A

1 RECOMMENDED P.C.B LAY OUT
2 APPLICABLE P.C.B. THICKNESS:1.6
3 MATING CONN. P/N
PLUG HOUSING :SEE TABLE

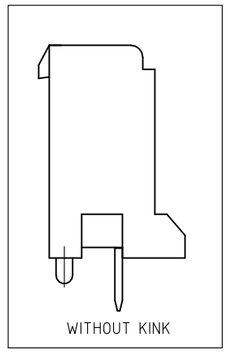

THE TYPE OF KEYING

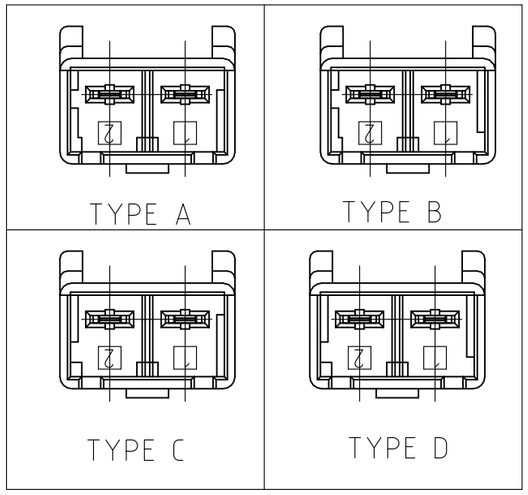

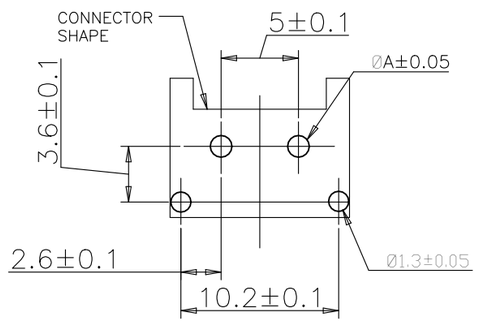

PUNCHING	1.25
DRILLING	1.4
	DIM A

1 PRINTED CIRCUIT BOARD RECOMMENDED HOLES

3-1376388-5	WITHOUT KINK	TYPE D	YELLOW	2POS	3-1376382-5
2-1376388-4	WITHOUT KINK	TYPE C	BLUE	2POS	2-1376382-4
1-1376388-3	WITHOUT KINK	TYPE B	RED	2POS	1-1376382-3
1376388-2	WITHOUT KINK	TYPE A	NATURAL	2POS	1376382-2
MATING CONN. P/N 3	WITH/WITHOUT KINK	TYPE OF KEYING	COLOR	POS	PART NO.

WIRE RANGE	INSULATION DIA
—	—

THIS DRAWING IS A CONTROLLED DOCUMENT.

DIMENSIONS: MM

TOLERANCES UNLESS OTHERWISE SPECIFIED:
0 PLC ± 0.2
1 PLC ±
2 PLC ±
3 PLC ±
4 PLC ±
ANGLES ± 1°

MATERIAL: SEE TABLE
FINISH: SEE TABLE

DWN A.OISHI 28AUG'00
CHK Y.KASHIWA 28AUG'00
APVD Y.KASHIWA 28AUG'00
PRODUCT SPEC 108-78863
APPLICATION SPEC 114-5292
WEIGHT —

TE Connectivity

NAME: 5.0 POWER KEY CONNECTOR 2P HEADER ASSEMBLY

SIZE	CAGE CODE	DRAWING NO	RESTRICTED TO
A3	00779	C-1376382	—

CUSTOMER DRAWING | SCALE 3:1 | SHEET 2 OF 2 | REV C4