© – TE Connectivity. All Rights Reserved.

REVISIONS					
P	LTR	DESCRIPTION	DATE	DWN	APVD
	N5	REVISED PER ECN-24-247102	23JAN2024	RK	MF

1. THE NOTED DIMENSION APPLIES AT THE INTERSECTION OF THE POST AND HOUSING
2. POINT OF MEASUREMENT FOR PLATING THICKNESS.
3. POSTS: .000030 GOLD IN CONTACT AREA .000100–.000200 MATTE TIN LEAD ON SOLDER TAIL, ALL OVER .000050 NICKEL
4. POSTS: .000030 GOLD IN CONTACT AREA .000100–.000200 MATTE TIN ON SOLDER TAIL, ALL OVER .000050 NICKEL
5. OBSOLETE PARTS: OBSOLETE CIS STREAMLINING PER D.RENAUD/D.SINISI

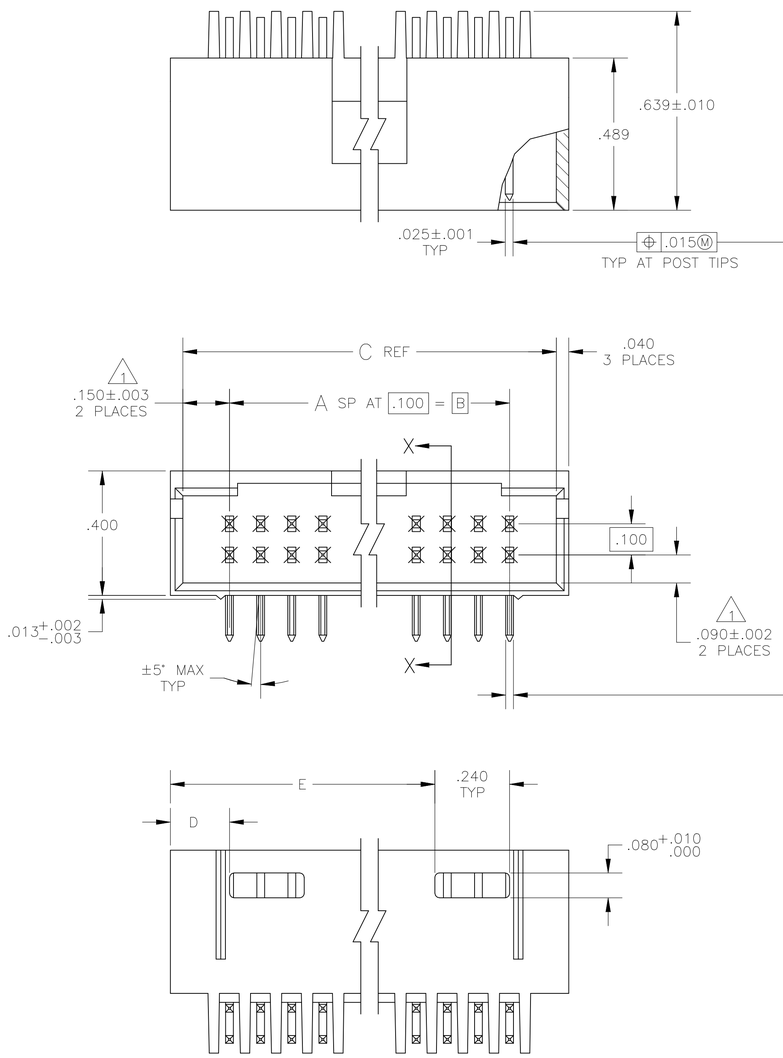

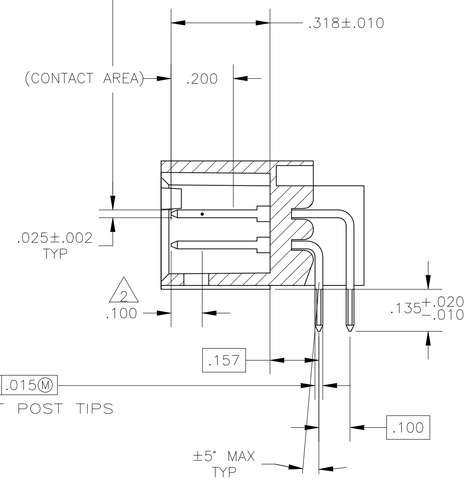

SECTION X–X

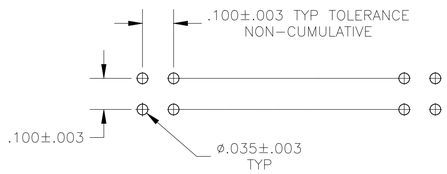

RECOMMENDED HOLE LAYOUT

PLATING	E	D	C	B	A	NO OF POSN	ASSEMBLY PART NUMBER
5 OBSOLETE	4	3.490	.190	3.800	3.500	35	72	8-103167-3
5 OBSOLETE	4	3.390	.190	3.700	3.400	34	70	8-103167-2
	4	3.290	.190	3.600	3.300	33	68	8-103167-1
5 OBSOLETE	4	3.190	.190	3.500	3.200	32	66	8-103167-0
5 OBSOLETE	4	3.090	.190	3.400	3.100	31	64	7-103167-9
5 OBSOLETE	4	2.990	.190	3.300	3.000	30	62	7-103167-8
	4	2.890	.190	3.200	2.900	29	60	7-103167-7
5 OBSOLETE	4	2.790	.190	3.100	2.800	28	58	7-103167-6
5 OBSOLETE	4	2.690	.190	3.000	2.700	27	56	7-103167-5
5 OBSOLETE	4	2.590	.190	2.900	2.600	26	54	7-103167-4
5 OBSOLETE	4	2.490	.190	2.800	2.500	25	52	7-103167-3
5 OBSOLETE	4	2.390	.190	2.700	2.400	24	50	7-103167-2
5 OBSOLETE	4	2.290	.190	2.600	2.300	23	48	7-103167-1
5 OBSOLETE	4	2.190	.190	2.500	2.200	22	46	7-103167-0
5 OBSOLETE	4	2.090	.190	2.400	2.100	21	44	6-103167-9
5 OBSOLETE	4	1.990	.190	2.300	2.000	20	42	6-103167-8
	4	1.890	.190	2.200	1.900	19	40	6-103167-7
5 OBSOLETE	4	1.790	.190	2.100	1.800	18	38	6-103167-6
5 OBSOLETE	4	1.690	.190	2.000	1.700	17	36	6-103167-5
	4	1.590	.190	1.900	1.600	16	34	6-103167-4
5 OBSOLETE	4	1.490	.190	1.800	1.500	15	32	6-103167-3
	4	1.390	.190	1.700	1.400	14	30	6-103167-2
5 OBSOLETE	4	1.290	.190	1.600	1.300	13	28	6-103167-1
	4	1.190	.190	1.500	1.200	12	26	6-103167-0
	4	1.090	.190	1.400	1.100	11	24	5-103167-9
	4	.990	.190	1.300	1.000	10	22	5-103167-8
	4	.890	.190	1.200	.900	9	20	5-103167-7
	4	—	.490	1.100	.800	8	18	5-103167-6
	4	—	.390	1.000	.700	7	16	5-103167-5
	4	—	.390	.900	.600	6	14	5-103167-4
	4	—	.290	.800	.500	5	12	5-103167-3
	4	—	.290	.700	.400	4	10	5-103167-2
5 OBSOLETE	4	—	.190	.600	.300	3	8	5-103167-1
5 OBSOLETE	3	3.490	.190	3.800	3.500	35	72	3-103167-3
5 OBSOLETE	3	3.390	.190	3.700	3.400	34	70	3-103167-2
	3	3.290	.190	3.600	3.300	33	68	3-103167-1
5 OBSOLETE	3	3.190	.190	3.500	3.200	32	66	3-103167-0
5 OBSOLETE	3	3.090	.190	3.400	3.100	31	64	2-103167-9
5 OBSOLETE	3	2.990	.190	3.300	3.000	30	62	2-103167-8
	3	2.890	.190	3.200	2.900	29	60	2-103167-7
5 OBSOLETE	3	2.790	.190	3.100	2.800	28	58	2-103167-6
5 OBSOLETE	3	2.690	.190	3.000	2.700	27	56	2-103167-5
5 OBSOLETE	3	2.590	.190	2.900	2.600	26	54	2-103167-4
5 OBSOLETE	3	2.490	.190	2.800	2.500	25	52	2-103167-3
	3	2.390	.190	2.700	2.400	24	50	2-103167-2
5 OBSOLETE	3	2.290	.190	2.600	2.300	23	48	2-103167-1
5 OBSOLETE	3	2.190	.190	2.500	2.200	22	46	2-103167-0
5 OBSOLETE	3	2.090	.190	2.400	2.100	21	44	1-103167-9
5 OBSOLETE	3	1.990	.190	2.300	2.000	20	42	1-103167-8
	3	1.890	.190	2.200	1.900	19	40	1-103167-7
5 OBSOLETE	3	1.790	.190	2.100	1.800	18	38	1-103167-6
5 OBSOLETE	3	1.690	.190	2.000	1.700	17	36	1-103167-5
	3	1.590	.190	1.900	1.600	16	34	1-103167-4
	3	1.490	.190	1.800	1.500	15	32	1-103167-3
	3	1.390	.190	1.700	1.400	14	30	1-103167-2
5 OBSOLETE	3	1.290	.190	1.600	1.300	13	28	1-103167-1
	3	1.190	.190	1.500	1.200	12	26	1-103167-0
	3	1.090	.190	1.400	1.100	11	24	103167-9
	3	.990	.190	1.300	1.000	10	22	103167-8
	3	.890	.190	1.200	.900	9	20	103167-7
OBSOLETE	3	—	.490	1.100	.800	8	18	103167-6
	3	—	.390	1.000	.700	7	16	103167-5
	3	—	.390	.900	.600	6	14	103167-4
	3	—	.290	.800	.500	5	12	103167-3
	3	—	.290	.700	.400	4	10	103167-2
	3	—	.190	.600	.300	3	8	103167-1

THIS DRAWING IS A CONTROLLED DOCUMENT.

DIMENSIONS: INCHES

TOLERANCES UNLESS OTHERWISE SPECIFIED:
0 PLC ± –
1 PLC ± –
2 PLC ± –
3 PLC ± .005
4 PLC ± –
ANGLES ± –

MATERIAL: HOUSING: FLAME RETARDANT THERMOPLASTIC COLOR : BLACK; POST:PHOS BRONZE

FINISH: SEE TABLE

DWN H MOLL 27JUL87
CHK R FEIDT 28JUL87
APVD R FLICKER 29JUL87
PRODUCT SPEC —
APPLICATION SPEC —
WEIGHT —

TE Connectivity

NAME: HDR ASSY, MOD II, SHROUDED, 4 SIDES, DR, .100X.100 RIGHT ANGLE, W/ .025 SQ POSTS

SIZE	CAGE CODE	DRAWING NO	RESTRICTED TO
A1	00779	C-103167	—

CUSTOMER DRAWING | SCALE 4:1 | SHEET 1 OF 1 | REV N5

4805 (1/15)