THIS DRAWING IS UNPUBLISHED. RELEASED FOR PUBLICATION -.- .
© COPYRIGHT - BY TYCO ELECTRONICS CORPORATION. ALL RIGHTS RESERVED.

LOC	DIST
AD	25

REVISIONS

P	LTR	DESCRIPTION	DATE	DWN	APVD
	A	REVISED PER ECO-07-008199	24APR07	DH	DB

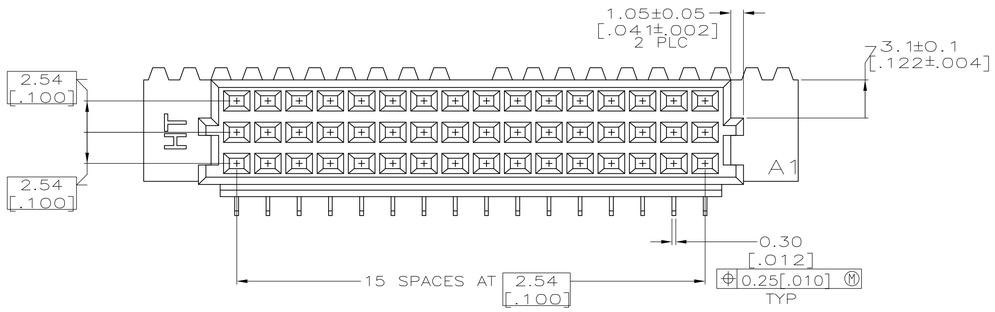

1. HOUSING MATERIAL: HIGH TEMPERATURE, GLASS-FILLED POLYMER. COLOR: GRAY OR WHITE. CONTACT: PHOSPHOR BRONZE.
2. CONTACT: DIN 41612 CLASS 2 IN CONTACT AREA, TIN LEAD ON POSTS.
3. RECOMMENDED HOLE SIZE FOR MANUAL APPLICATION OF CONNECTOR ONTO PC BOARD.
4. PART NUMBER, DATE CODE IDENTIFICATION, CSA LOGO HOT-STAMPED THIS APPROXIMATE AREA.
5. CONTACT POINT.
6. HOT-STAMPING ON THIS SIDE.

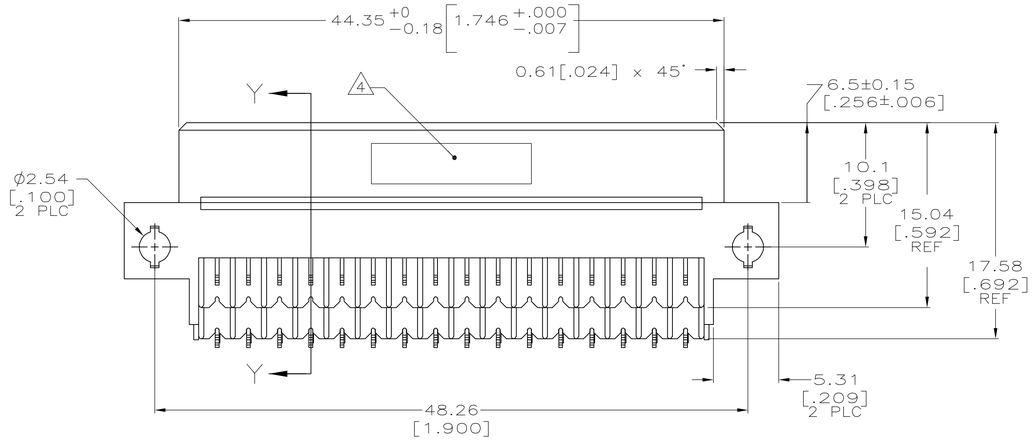

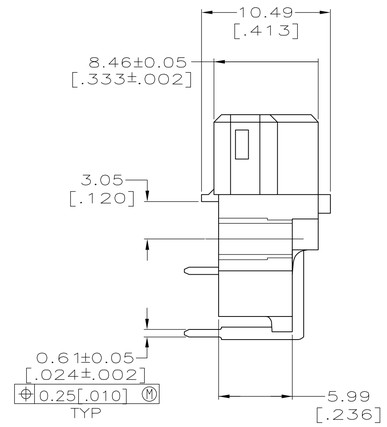

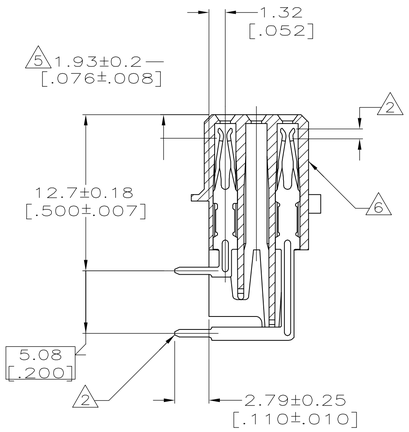

SECTION Y—Y

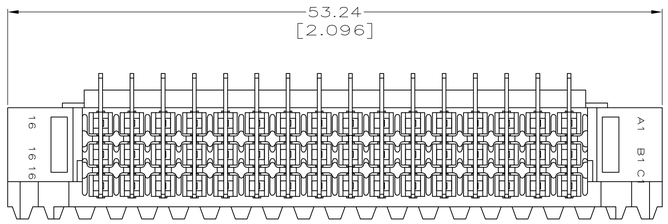

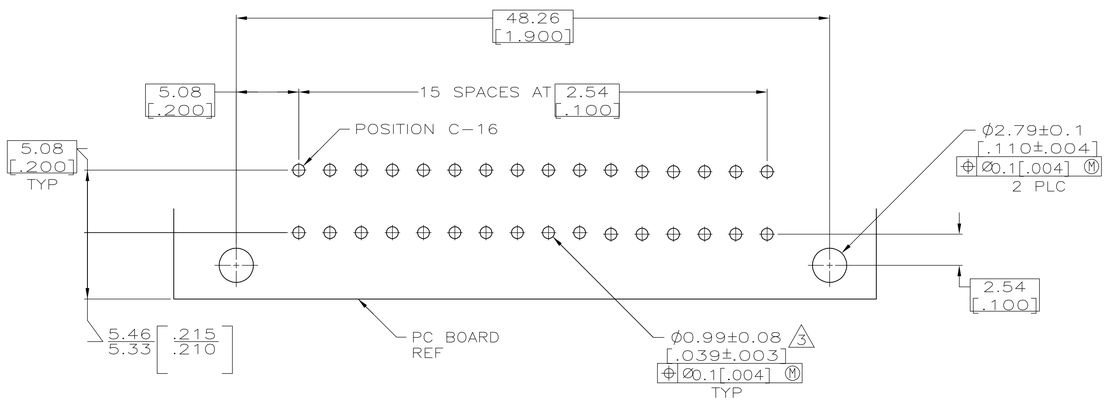

PC BOARD LAYOUT

1 THRU 16	X	–	X	32	148526-5
POSITIONS LOADED	C	B	A	NO. OF LOADED POSITION	PART NUMBER
	ROWS LOADED				

THIS DRAWING IS A CONTROLLED DOCUMENT.

DWN B.CARBO 05 APR 99
CHK C.RICHARD 05 APR 99
APVD C.RICHARD 05 APR 99
PRODUCT SPEC —
APPLICATION SPEC —
WEIGHT —

Tyco Electronics Corporation
Harrisburg, PA 17105-3608

DIMENSIONS: mm [INCHES]

TOLERANCES UNLESS OTHERWISE SPECIFIED:
0 PLC ± –
1 PLC ± –
2 PLC ± 0.13 [.005]
3 PLC ± –
4 PLC ± –
ANGLES ± –

MATERIAL 1
FINISH 2

NAME: RECEPTACLE ASSEMBLY, EUROCARD, TYPE 1/2R, 32 POSITION, HIGH TEMPERATURE

SIZE	CAGE CODE	DRAWING NO	RESTRICTED TO
A1	00779	C-148526	—

CUSTOMER DRAWING

SCALE	SHEET	REV
4:1	1 OF 1	A