DWG NO 83952

USED ON –

THIS DRAWING IS A CONTROLLED DOCUMENT FOR AMP INCORPORATED. IT IS SUBJECT TO CHANGE AND THE CONTROLLING ENGINEERING ORGANIZATION SHOULD BE CONTACTED FOR THE LATEST REVISION.

1. FINISH: PLATE .000250–.000350 THK SILVER, AMP 112-32-2 (INCLUDING ANTI-TARNISH TREATMENT), OVER .000050–.000100 THK NICKEL, AMP 112-25-2.
2. LUBRICATE ENTIRE TERMINAL WITH MILLER STEPHENSON MS-181 OR EQUIVALENT AFTER PLATING
3. SURFACE AREA 1.51 SQ IN
4. TARNISH NOT ALLOWED IN CRITICAL AREAS – CONTACT AREAS ON SPRING MEMBERS – 4 PLCS. B1

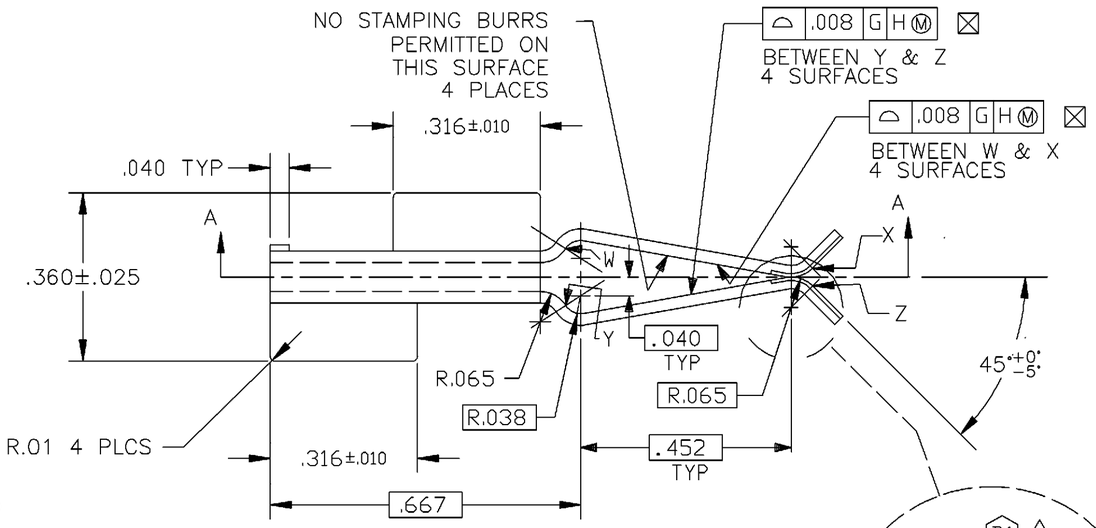

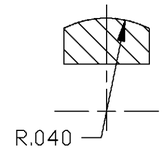

SECTION B–B
SCALE 10:1
4 PLACES

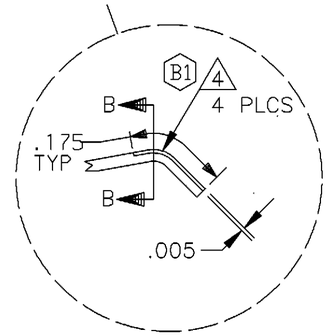

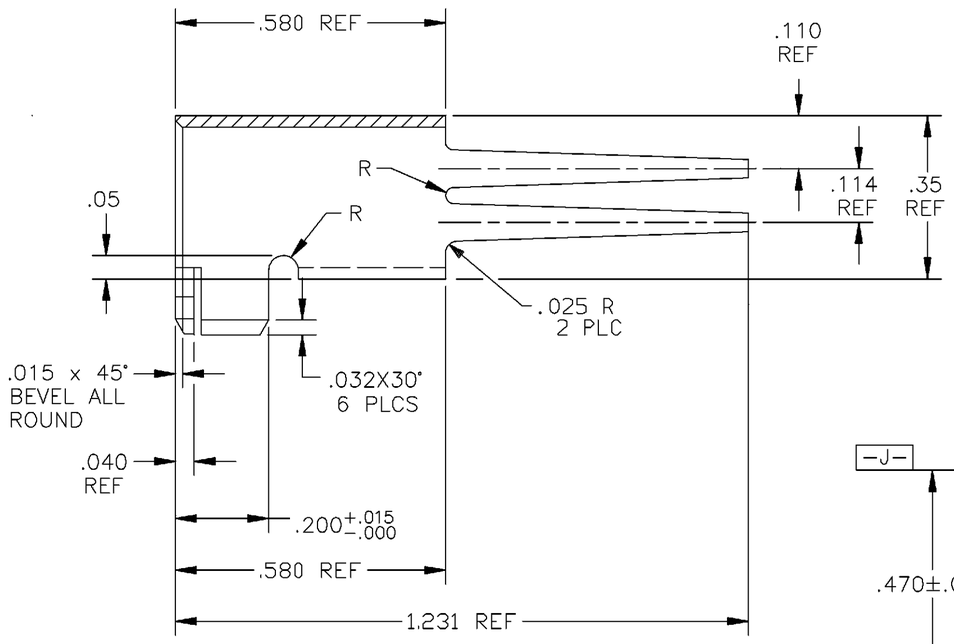

SECTION A–A

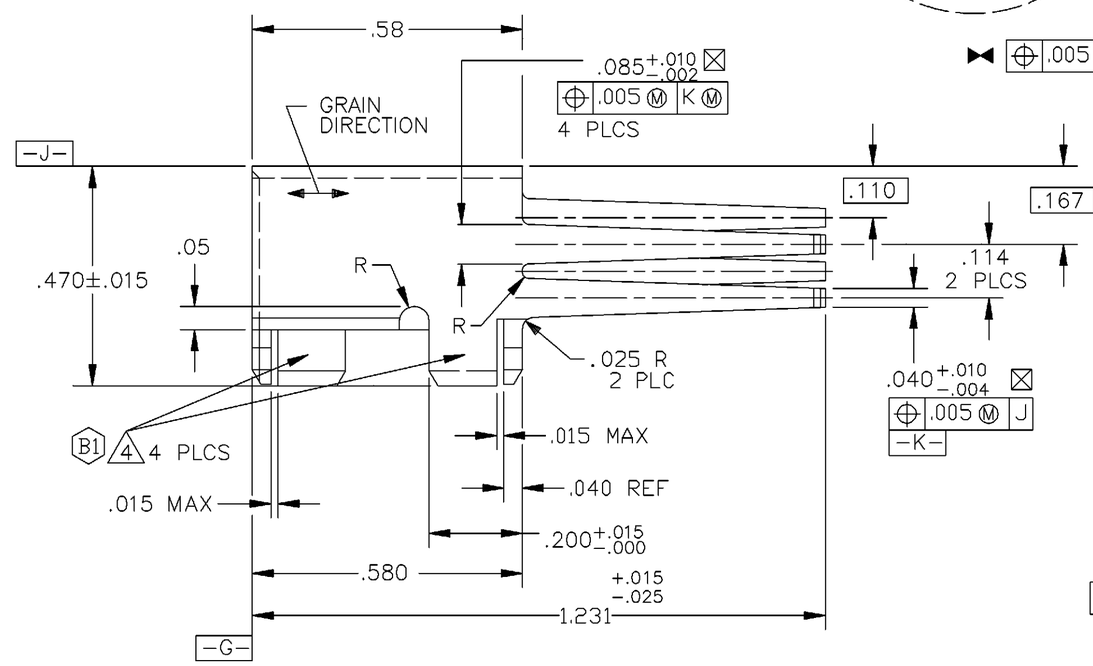

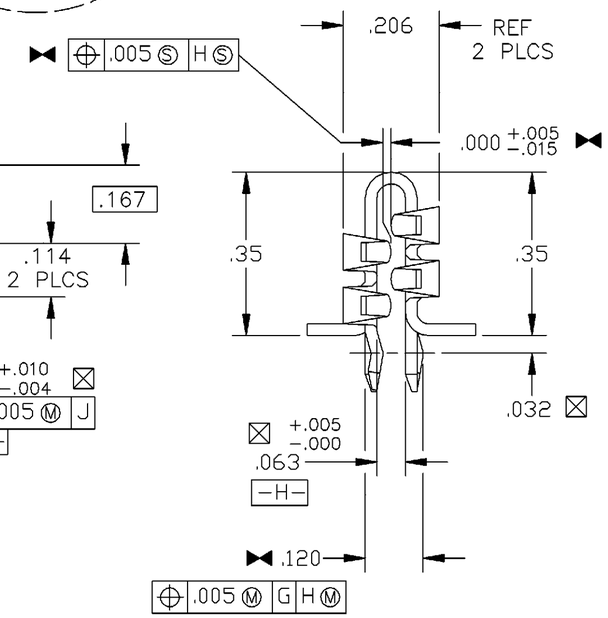

1 2	83952-1	83952-2
UNPLATED	703397-7	83952-1
FINISH	MATERIAL	PART NO.

LEGEND
SPC CONTROLLED DIMENSION
MAJOR DIMENSION

DIMENSIONS: INCHES

TOLERANCES UNLESS OTHERWISE SPECIFIED:
0 PLC ±-
1 PLC ±-
2 PLC ±.02
3 PLC ±.005
4 PLC ±-

ANGLES± 0°-30'
SURFACE TEXTURE 32 REMOVE BURRS, BREAK SHARP EDGES R.015 MAX.

P	LTR	REVISION RECORD	DATE	DWN	APVD
	B1	REV PER LC00-0084-98	05AUG98	MM	RK
	B	REV PER LC00-0043-96	02APR96	PC	BJ
	A	REV PER LC00-0078-95	06SEP95	MC	BJ
	0	RELEASE PER LC00-0026-95	14MAR95	GG	GG

DRAWN BY: GEORGE GEE 17FEB95
CHECKED BY: J.SADABA 28MAR95
APPROVED BY: G. GOTO 28 MAR 95
MATERIAL: SEE TABLE
HEAT TREAT: NONE
AMP of Canada Markham, Ontario

NAME: CONNECTOR, BOARD MOUNT STYLE, 062 SERIES, PLUGGABLE BUS BAR CONNECTOR

SCALE 4 : 1 | SIZE A2 | DRAWING NO 83952 | SHEET 1 OF 1 | REV B1

LOC BG
DIST 5

THIS INFORMATION IS CONFIDENTIAL AND IS DISCLOSED TO YOU ON CONDITION THAT NO FURTHER DISCLOSURE IS MADE BY YOU TO OTHER THAN AMP PERSONNEL WITHOUT WRITTEN AUTHORIZATION FROM AMP INCORPORATED, HARRISBURG, PA.

ACADR13 S:\ENG-SERV\PRODUCT\WIP\0043-96\P083952.DWG