THIS DRAWING IS UNPUBLISHED. RELEASED FOR PUBLICATION 20
© COPYRIGHT 20 BY - ALL RIGHTS RESERVED.

REVISIONS

P	LTR	DESCRIPTION	DATE	DWN	APVD
	B	ECR-16-010100	14JUL2016	L.Z	X.X
	B1	ECR-18-008476	08JUN2018	G.W	C.W
	C	ECR-19-009136	24JUL2019	C.D	C.W

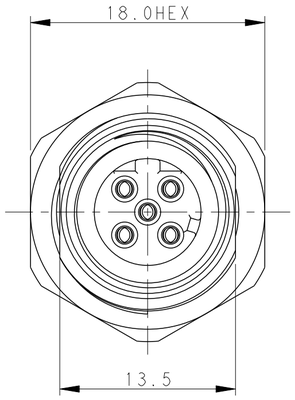

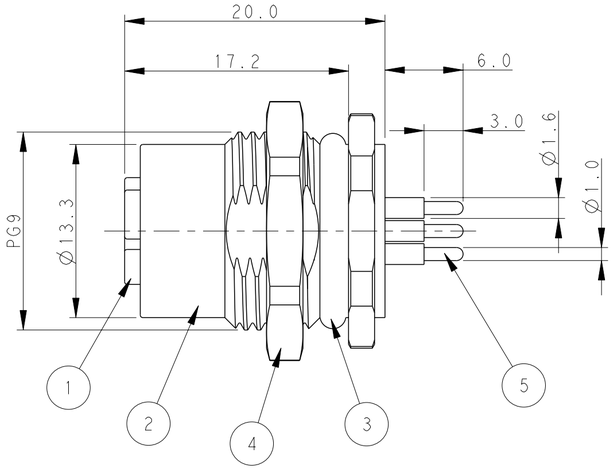

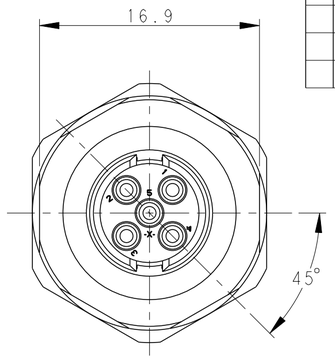

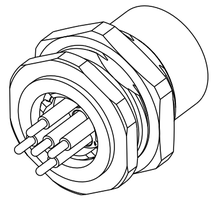

TABLE 1

TECHNICAL DATA	T4141512021-000	T4141512031-000	T4141512041-000	T4141512051-000
RATED VOLTAGE	250V	250V	250V	60V
RATED CURRENT	4A	4A	4A	4A
POLLUTION DEGREE	3	3	3	3
OVERVOLTAGE CATEGORY	II	II	II	II
MATERIAL GROUP	II	II	II	II
CONTACT RESISTANCE	<=10mΩ	<=10mΩ	<=10mΩ	<=10mΩ
INSULATION RESISTANCE	>100MΩ	>100MΩ	>100MΩ	>100MΩ
DEGREE OF PROTECTION	IP67	IP67	IP67	IP67
OPERATION TEMPERATURE	-40~85°C	-40~85°C	-40~85°C	-40~85°C

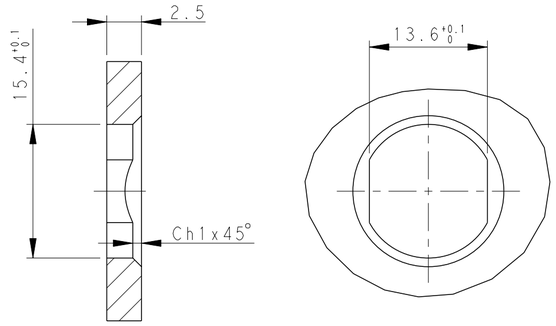

RECOMMENDED PANEL CUTOUT

NOTE:
1. TECHNICAL DATA: SEE TABLE 1
2. RECOMMENDED MOUNT PANEL SEE DETAIL
3. PRODUCT COMPLIES WITH IEC61076-2-101
4. ALL MATERIALS TO BE ROHS COMPLIANT
5. ALL MATERIALS TO BE REACH COMPLIANT
6. PN INFORMATION FOR ASSEMBLY PARTS

T41415120X1-000
- CONTACT FINISH:
  - 1; GOLD 3u''
- NUMBER OF PINS:
  - 02: 2 PINS
  - 03: 3 PINS
  - 04: 4 PINS
  - 05: 5 PINS

注释:
1:技术参数,见表1
2:推荐开孔尺寸详见如图所示
3:产品符合标准IEC61076-2-101
4:所有材料符合ROHS参照标准TEC-138-705
5:所有材料符合REACH参照标准TEC-138-705
6:成品料号信息如下:

T41415120X1-000
- 端子电镀:
  - 1: 3u''金
- 针数:
  - 02: 2 针
  - 03: 3 针
  - 04: 4 针
  - 05: 5 针

PIN ARRANGEMENT
D-CODE

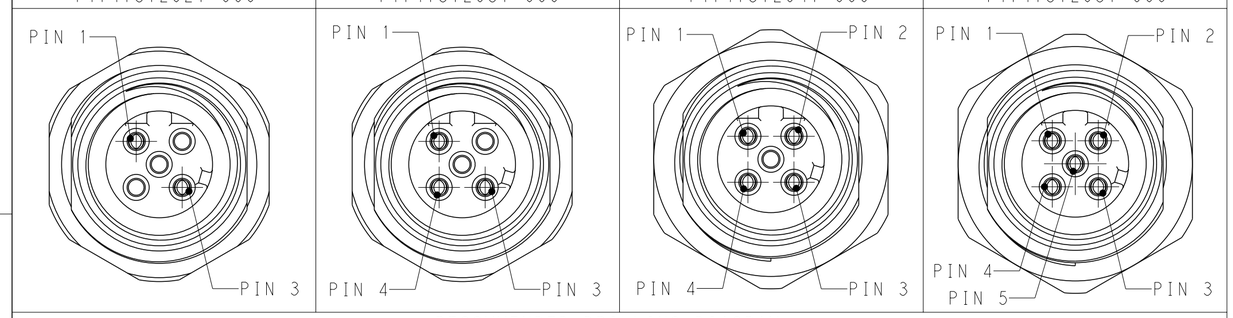

RECOMMENDED DRILLING DIAGRAM

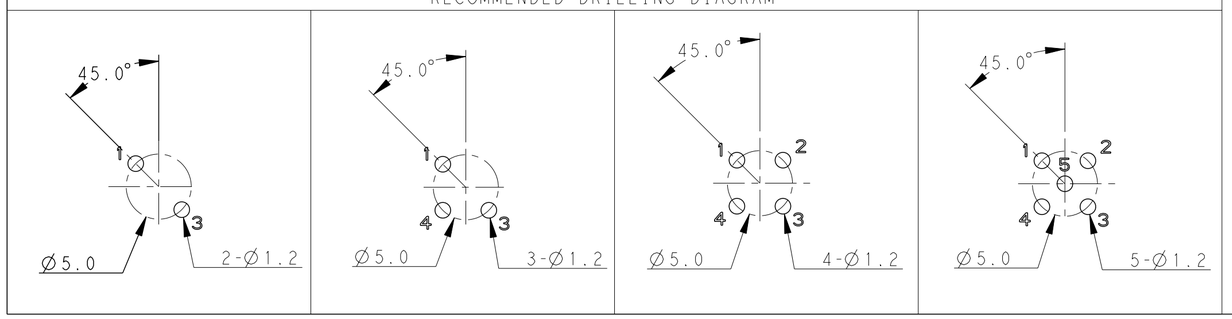

PLATING	MATERIAL	DESCRIPTION	ITEM	T4141512021-000	T4141512031-000	T4141512041-000	T4141512051-000
3u'' GOLD PLATED	COPPER ALLOY	CONTACT	5	2	3	4	5
80u''NICKEL PLATED	COPPER ALLOY	METAL NUT	4	1	1	1	1
BLACK	RUBBER	O-RING	3	1	1	1	1
80u''NICKEL PLATED	COPPER ALLOY	M12,MALE,METAL BODY	2	1	1	1	1
-	PA66	M12,MALE HSG	1	1	1	1	1

THIS DRAWING IS A CONTROLLED DOCUMENT.

DIMENSIONS: mm

TOLERANCES UNLESS OTHERWISE SPECIFIED:
0 PLC ±-
1 PLC ±0.2
2 PLC ±0.2
3 PLC ±0.2
4 PLC ±-
ANGLES ±-

MATERIAL - -
FINISH - -

DWN BO GAO 16FEB2016
CHK KOBBY ZHAO 16FEB2016
APVD XIANG XU 16FEB2016
PRODUCT SPEC 108-106140
APPLICATION SPEC -
WEIGHT -

CUSTOMER DRAWING

TE Connectivity

NAME M12 PANEL MOUNT CONNECTOR
D CODE,FEMALE,REAR MOUNTING
PCB SOLDERING

SIZE A2 | CAGE CODE - | DRAWING NO C-T41415120X1000 | RESTRICTED TO -
SCALE 3:1 | SHEET 1 OF 1 | REV C

1471-9 (3/13)