THIS DRAWING IS UNPUBLISHED. RELEASED FOR PUBLICATION 20
© COPYRIGHT 20 BY TYCO ELECTRONICS CORPORATION, ALL RIGHTS RESERVED.

LOC	DIST
AD	00

REVISIONS

P	LTR	DESCRIPTION	DATE	DWN	APVD
	B3	REVISED PER ECO-08-022187	06SEP2008	HMR	DR
	B4	REVISED PER ECO-09-008097	06APR2009	MF	DR

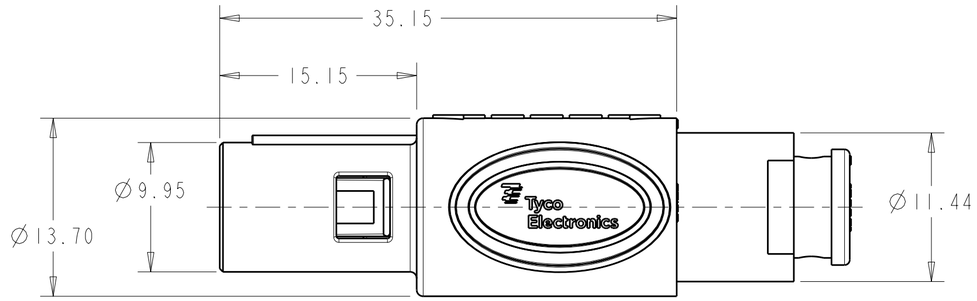

SCALE 3:1

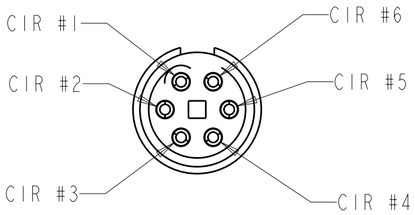

INSERT SUB-ASSY
CIRCUIT DESIGNATION VIEW

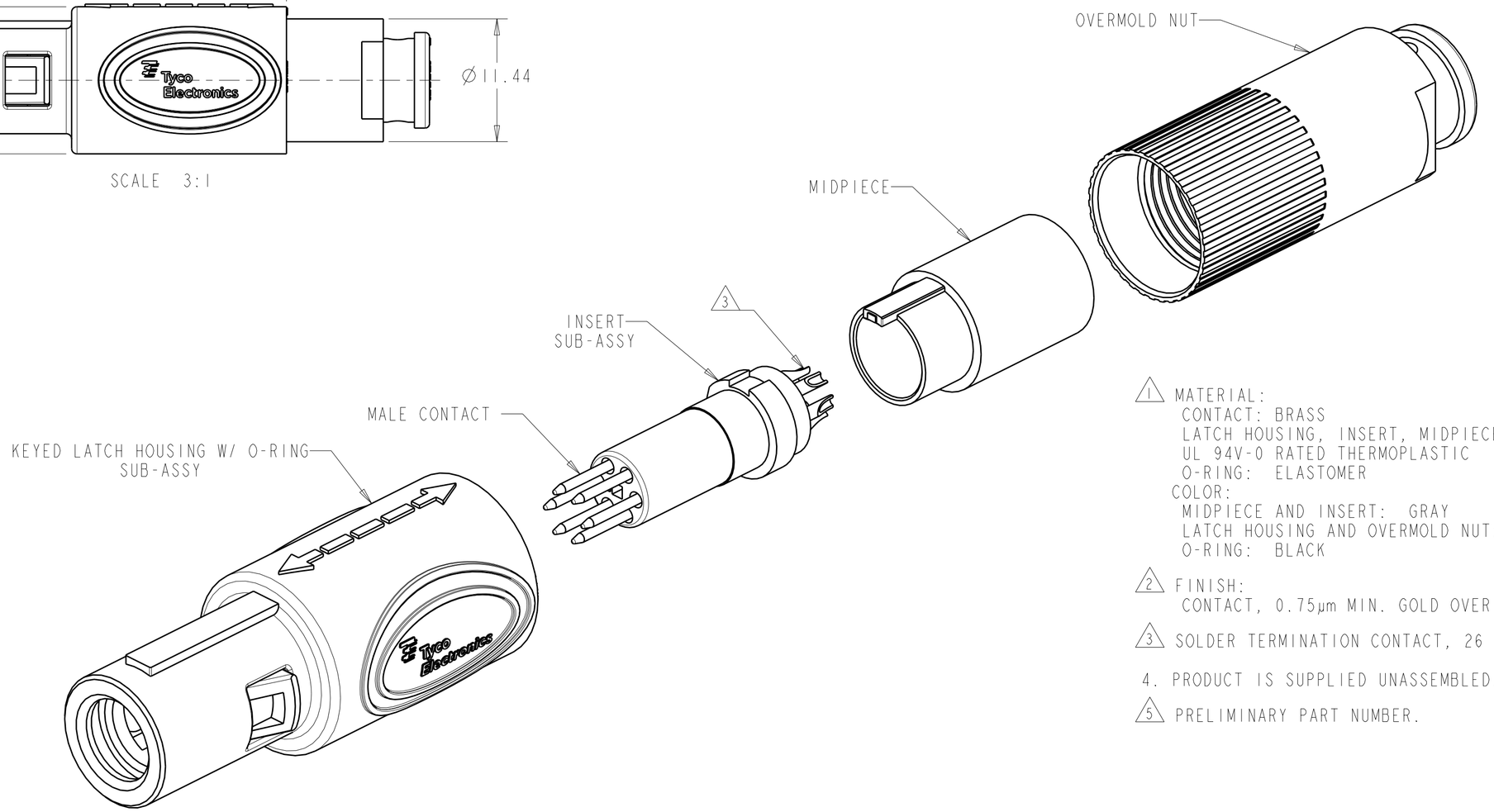

1 MATERIAL:
CONTACT: BRASS
LATCH HOUSING, INSERT, MIDPIECE, NUT:
UL 94V-0 RATED THERMOPLASTIC
O-RING: ELASTOMER
COLOR:
MIDPIECE AND INSERT: GRAY
LATCH HOUSING AND OVERMOLD NUT: SEE TABLE
O-RING: BLACK

2 FINISH:
CONTACT, 0.75µm MIN. GOLD OVER NICKEL

3 SOLDER TERMINATION CONTACT, 26 AWG WIRE MAX.

4. PRODUCT IS SUPPLIED UNASSEMBLED.

5 PRELIMINARY PART NUMBER.

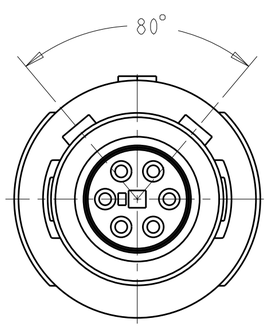

80° KEYING
SCALE 4:1

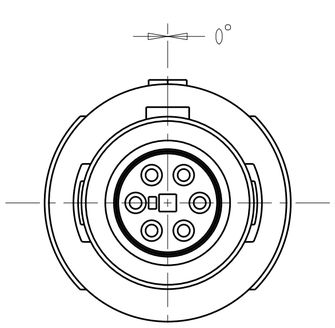

0° KEYING
SCALE 4:1

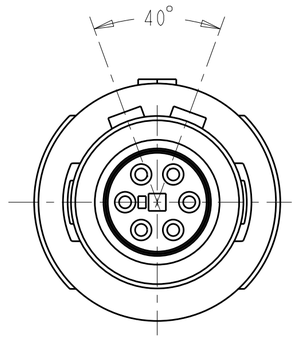

40° KEYING
SCALE 4:1

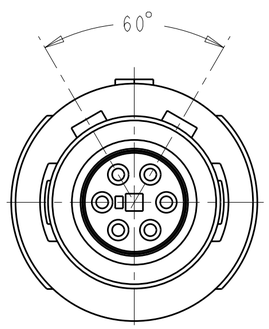

60° KEYING
SCALE 4:1

LATCH HOUSING AND NUT COLOR	KEYING	PART NO.
GRAY	60°	1877850-8
BLACK	60°	1877850-7
GRAY	40°	1877850-6
BLACK	40°	1877850-5
GRAY	80°	1877850-4
GRAY	0°	1877850-3
BLACK	80°	1877850-2
BLACK	0°	1877850-1

THIS DRAWING IS A CONTROLLED DOCUMENT FOR TYCO ELECTRONICS CORPORATION. IT IS SUBJECT TO CHANGE AND THE CONTROLLING ENGINEERING ORGANIZATION SHOULD BE CONTACTED FOR THE LATEST REVISION.

DIMENSIONS: mm

TOLERANCES UNLESS OTHERWISE SPECIFIED:
0 PLC ±-
1 PLC ±0.13
2 PLC ±0.08
3 PLC ±-
4 PLC ±-
ANGLES ±1°

MATERIAL 1 -
FINISH 2 -

DWN K. MILLER 09MAR2006
CHK L.BREKOSKY 09MAR2006
APVD -
PRODUCT SPEC 108-2249
APPLICATION SPEC 114-13184
WEIGHT -

Tyco Electronics
Tyco Electronics
Harrisburg, PA 17105-3608

NAME
6 POSITION
OVERMOLD CABLE NUT
STRAIGHT PLUG ASSEMBLY

SIZE	CAGE CODE	DRAWING NO	RESTRICTED TO
A2	00779	C-1877850	-

CUSTOMER DRAWING
SCALE 5:1 SHEET 1 OF 1 REV B4

AMP 1471-9 REV 31MAR2000

Pro/ENGINEER DRAWING