ITEM #	PART #	QTY	DESCRIPTION	MATERIAL
1	AP-145-1M	1	SHELL ASS'Y	303 SS & NEOPRENE
2	AP-146-6	1	INSERT ASS'Y	DIALLYPHTHALATE, TYPE SDGF & GOLD PLATED BRASS
3	AP-105-5	1	STRAIN RELIEF	NYLON
4	AP-116-3	1	WASHER	RUBBER
5	AP-116-7	1	NUT ADAPTER	ALUMINUM ALLOY ANODIZED
6	SEE TABLE #1	1	BUSHING	RUBBER
7	SEE TABLE #1	1	WASHER	STAINLESS STEEL
8	SEE TABLE #1	1	SPRING	302 STAINLESS STEEL
9	AP-116-6	1	STUD	ANODIZED, ALUMINUM ALLOY

C AP-146M-CP

TABLE #1

PART #	CABLE SIZE	BUSHING	WASHER	SPRING
AP-146M-1	Ø.165±.010	AP-116-17	AP-116-2	AP-116-4
AP-146M-2	Ø.228±.010	AP-116-18	AP-116-2	AP-116-4
AP-146M-3	Ø.250±.010	AP-116-8	AP-116-2	AP-116-4
AP-146M-4	Ø.290±.010	AP-116-19	AP-116-2	AP-116-4
AP-146M-5	Ø.320±.010	AP-116-20	AP-116-22	AP-116-21

NOTES:
1) UNLESS OTHERWISE SPECIFIED, THIS CONNECTOR MEETS ALL GENERAL REQUIREMENTS & SPECIFICATIONS OF MIL-C-55116
2) MATES WITH U-283/U PANEL MOUNT CONNECTOR & U-328/U INLINE CONNECTOR

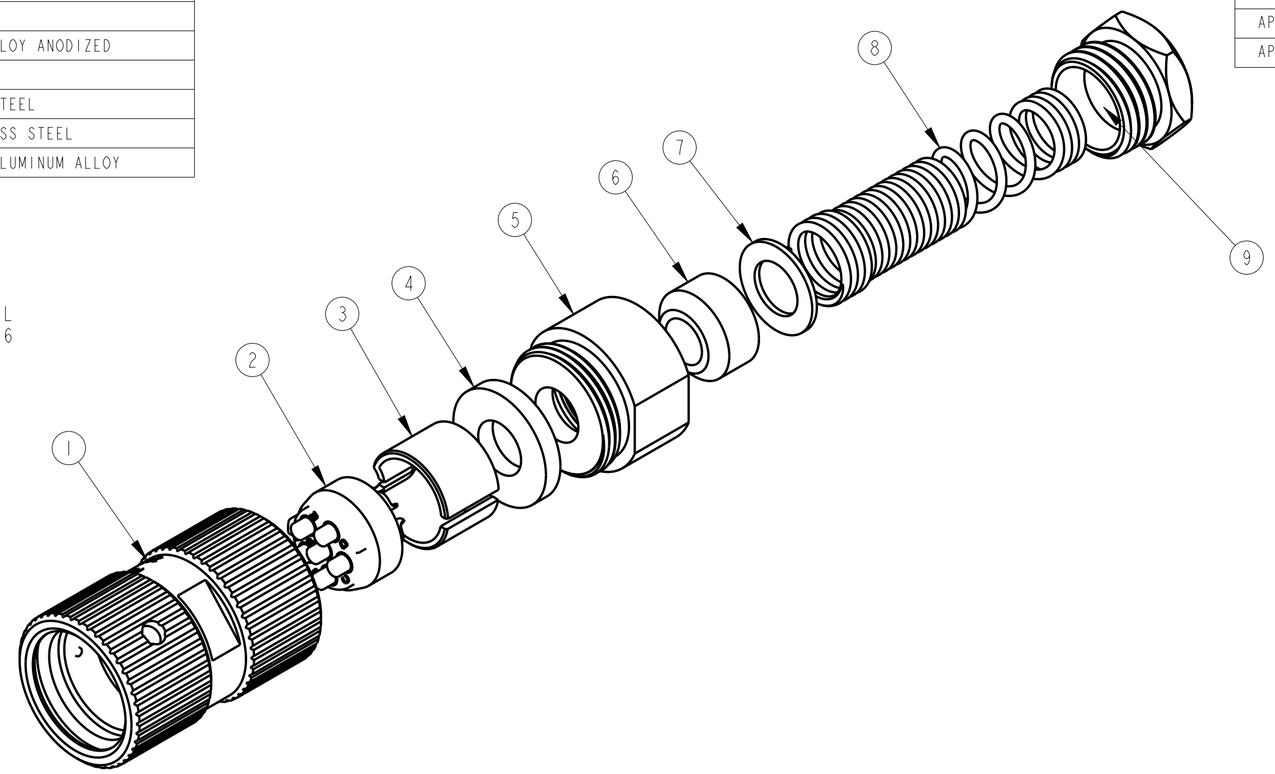

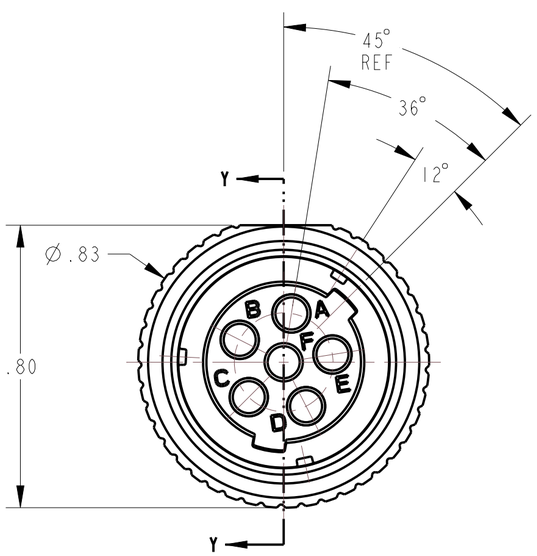

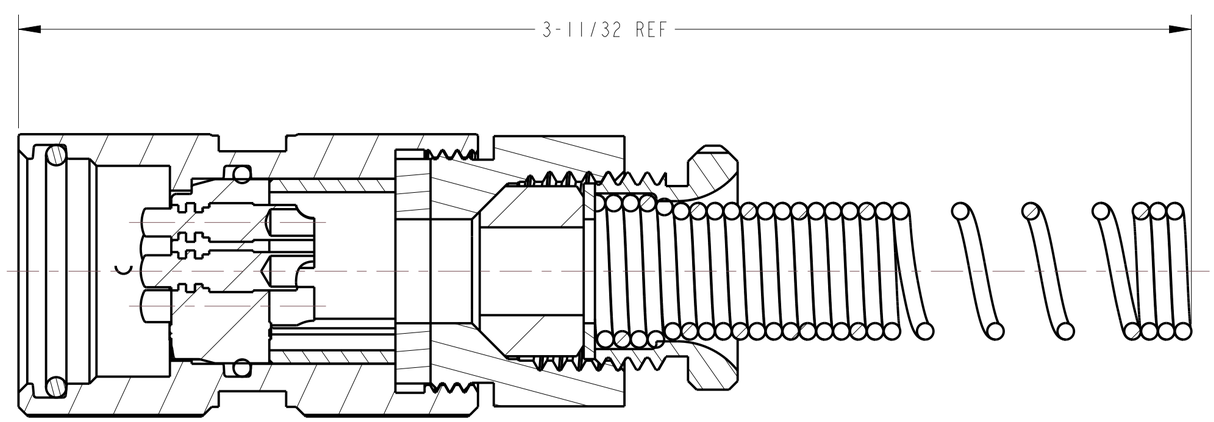

SECTION Y-Y

THIS DOCUMENT CONTAINS PROPRIETARY INFORMATION OF NEXUS, INCORPORATED AND SUCH INFORMATION MAY NOT BE DISCLOSED TO OTHERS FOR ANY PURPOSE OR USED FOR ANY PURPOSE WITHOUT THE WRITTEN CONSENT OF NEXUS.

LET.	REVISION	CN #	DATE	CHK
F	ADD '-3'	1256	08/19 2019	BAM
E	DEL:.35(B-6)	235	3/21 2017	HR
D	DEL: 36°, ADD: 48° REF; 36°	226	8/24 2015	HR
C	ADDED WASHER & SPRING TO TABLE, ADDED "REF" TO O-RING, ADDED SEE TABLE 1 TO WASHER & SPRING CALLOUT, CHANGE MARKING TO NEXUS	052	3/26 2010	GPH
B	REMOVE "U-220/U" FROM NOTE 2	034	12/14 2009	GPH
A	INITIAL RELEASE	028	9/14 2009	GPH

DWN.BY GPH DATE 9/14/09
CHECKED BY GPH DATE 9/14/09
APPR.BY GPH DATE 9/14/09

UNLESS OTHERWISE SPECIFIED DIMENSIONS ARE IN INCHES & OR [mm]
TOLERANCES:
DECIMAL: ±.XX[X.X] ±.XXX[X.XX] ±.XXXX[X.XXX] ±.01[0.3] ±.005[0.13] ±.0005[0.012]
FRACTION: ±X/XX ±1/64 ANGLES: ±.X° ±.5°

MATERIAL
FINISH
WEIGHT ——— SCALE = 3.00 :1
TITLE AUDIO PLUG
DO NOT SCALE DWG. SHEET 1 OF 1

NEXUS
STAMFORD, CONN
SIZE C DWG. NO. AP-146M-CP