DRAWING FOR REFERENCE: This is subject to change without notice
08/11/2012

HRS DRAWING FOR REFERENCE

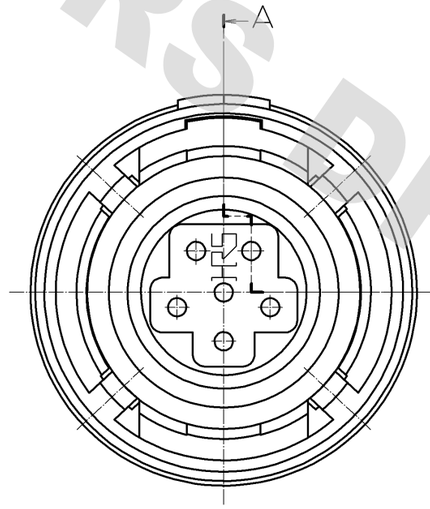

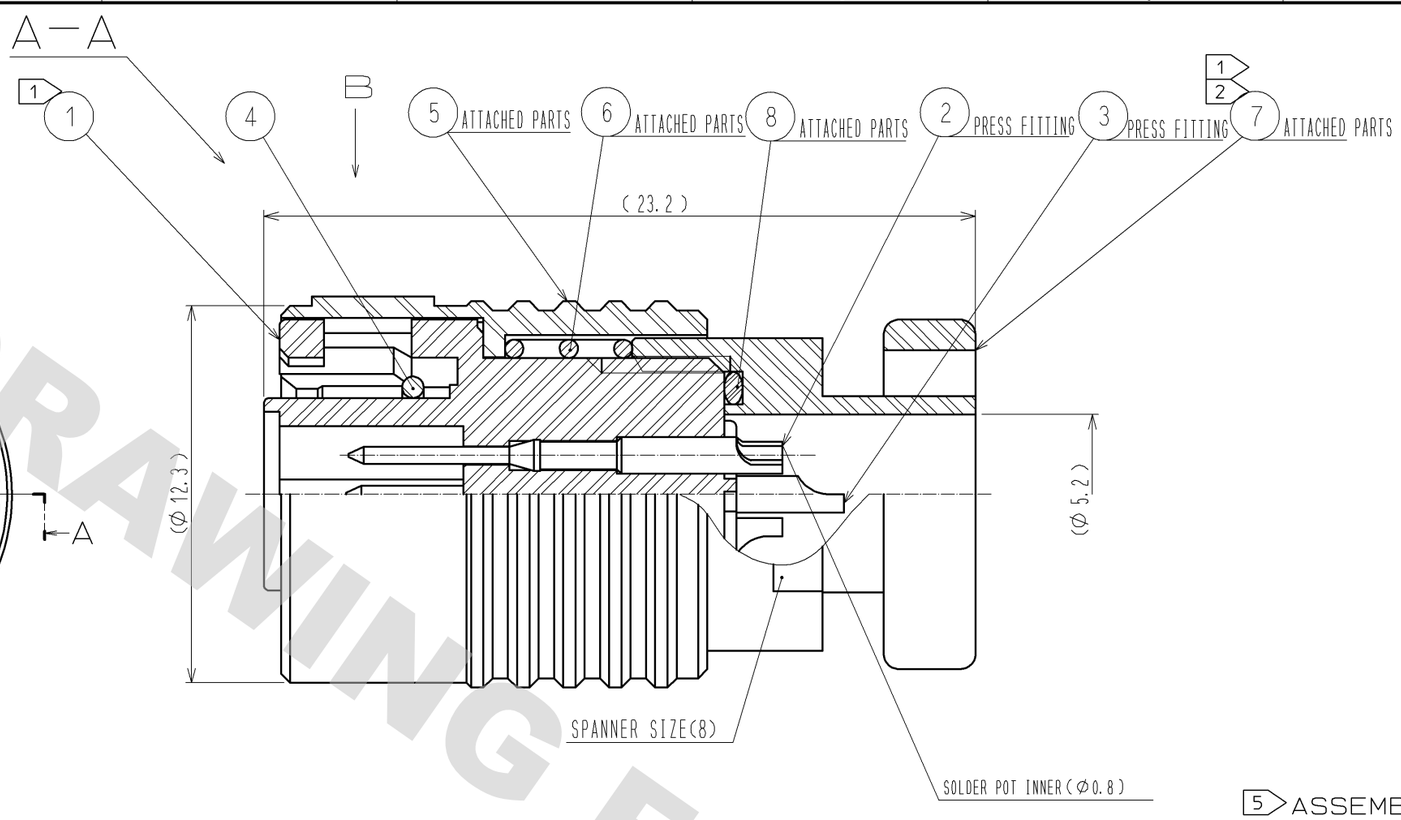

CONTACT POSITION ARRANGEMENT

THE CONTACT CONFIGURATION DEPICT A VIEW FROM THE WIRING SIDE.

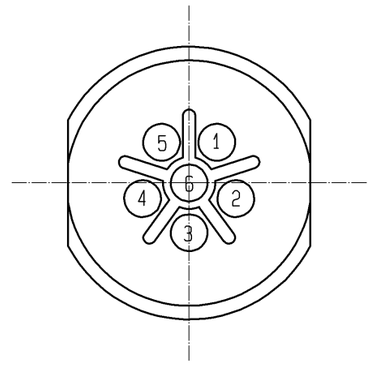

B

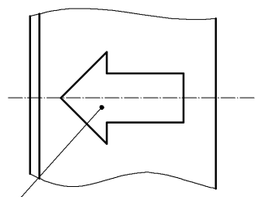

MATING MARK
(PRINTED IN WHITE)

5 ASSEMBLY PROCEDURE (2 : 1)

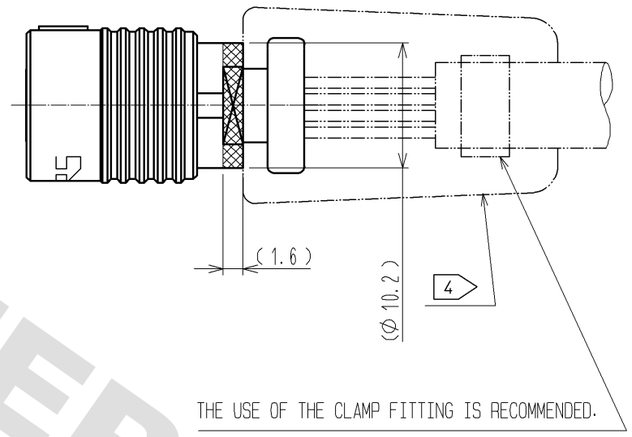

THE USE OF THE CLAMP FITTING IS RECOMMENDED.

NOTES

1. THE RECOMMENDED CLUMP TORQUE OF REF. NO. ⑦ IS 0.5N·m. LOCTITE 271, LOCPRIMER 7649, HENKEL JAPAN LTD IS RECOMMENDED TO PREVENT REF. NO. ⑦ FROM LOOSENING.
2. ROTATION EXAMPLES OF NO.① AND NO.⑦ ARE SHOWN. FOR OVERMOLDING NOTE THAT THE POSITION IS NOT ALWAYS THE SAME.
3. APPLICABLE JIG
   SOLDER TERMINATION FIXTURE : HR30-6P-6S-TC01(CL150-0214-9)
4. WHEN THIS PRODUCT ASSEMBLED, IT SHALL APPLY TO ETAD-C0198 AND BE OVERMOLDED BY CUSTOMER.
   CABLE CLAMP STRENGTH, WATERPROOF PERFORMANCE DEPEND ON OVERMOLD.
   WE RECOMMENDED CHECKING THE QUALITY BEFORE THE USAGE.
5. THE MOLDING DIE FOR OVERMOLDING SHALL BE DESIGNED AS HOLDING DOWN THE AREA ▩ (SPANNER SETTING AREA(8) AND CIRCUMFERENCE OF (φ10.2)) AS SHOWN IN THE DRAWING.

⑦(2 : 1)

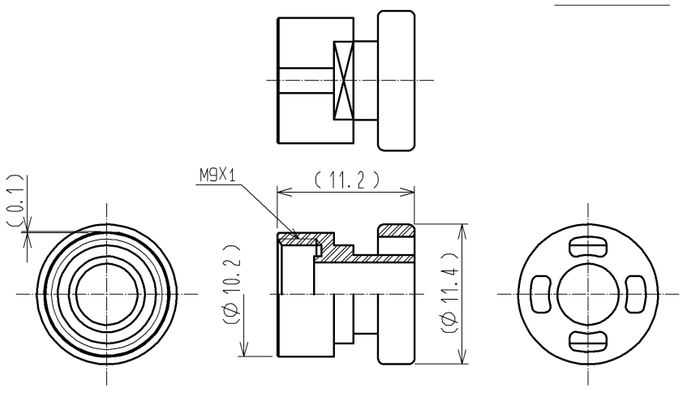

NO.	MATERIAL	FINISH , REMARKS	NO.	MATERIAL	FINISH , REMARKS
4	SILICONE RUBBER	(RED)	8	SILICONE RUBBER	(RED)
3	BRASS	SURFACE PLATING : GOLD PLATING 0.2μm min. UNDER PLATING : NICKEL PLATING 2μm min.	7	POLYBUTYLENE TEREPHTHALATE	(BLACK) UL94V-0
2	BRASS	SURFACE PLATING : GOLD PLATING 0.2μm min. UNDER PLATING : NICKEL PLATING 2μm min.	6	STAINLESS STEEL	
1	POLYPHENYLENE SULFIDE	(BLACK) UL94V-0	5	POLYBUTYLENE TEREPHTHALATE	(BLACK) UL94V-0

UNITS	SCALE	COUNT	DESCRIPTION OF REVISIONS	DESIGNED	CHECKED	DATE
mm	5 : 1					

HRS HIROSE ELECTRIC CO., LTD.

APPROVED	: SU. OBARA	09.11.09	DRAWING NO.	EDC3-116606-00
CHECKED	: HY. KISHI	09.11.09	PART NO.	HR30-6PB-6P
DESIGNED	: TY. SUZUKI	09.11.04	CODE NO.	CL130-0037-0-00
DRAWN	: TY. SUZUKI	09.11.04		1/1