© N/A TE Connectivity. All Rights Reserved.

REVISIONS					
P	LTR	DESCRIPTION	DATE	DWN	APVD
	S	REVISED PER ECO 20-015430	5-25-21	CT	RL

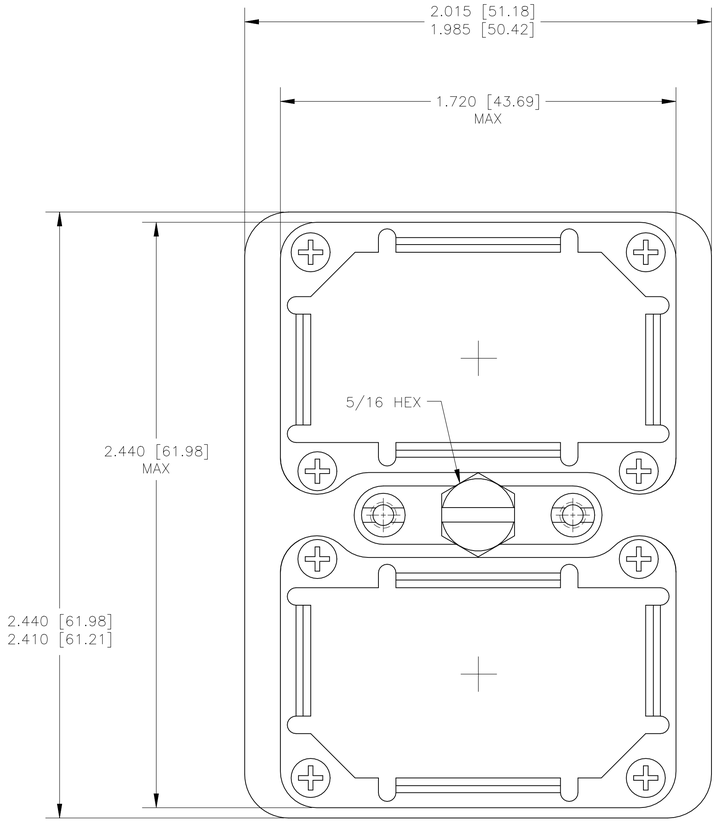

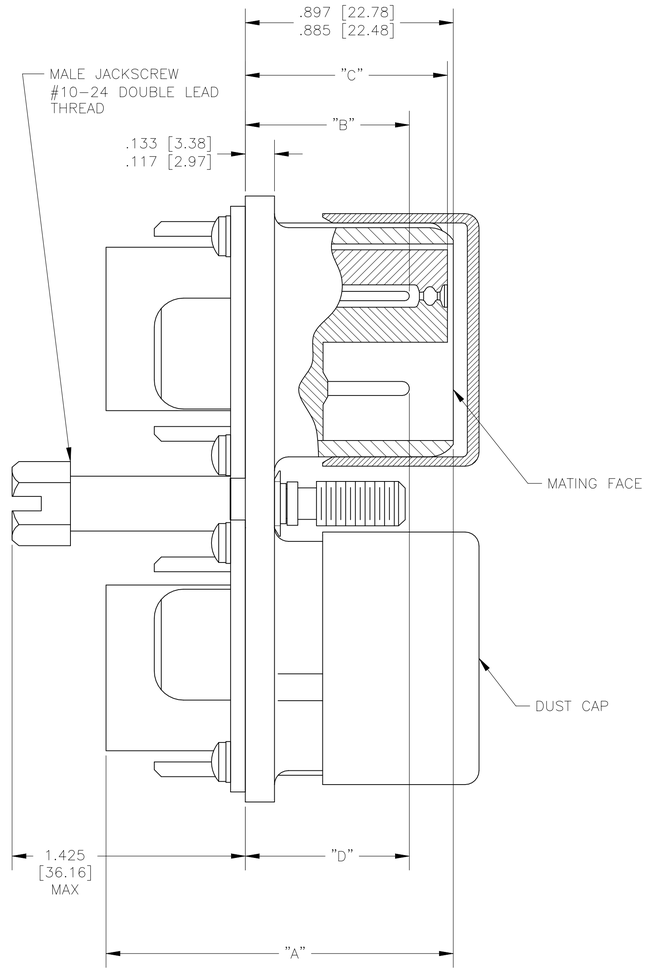

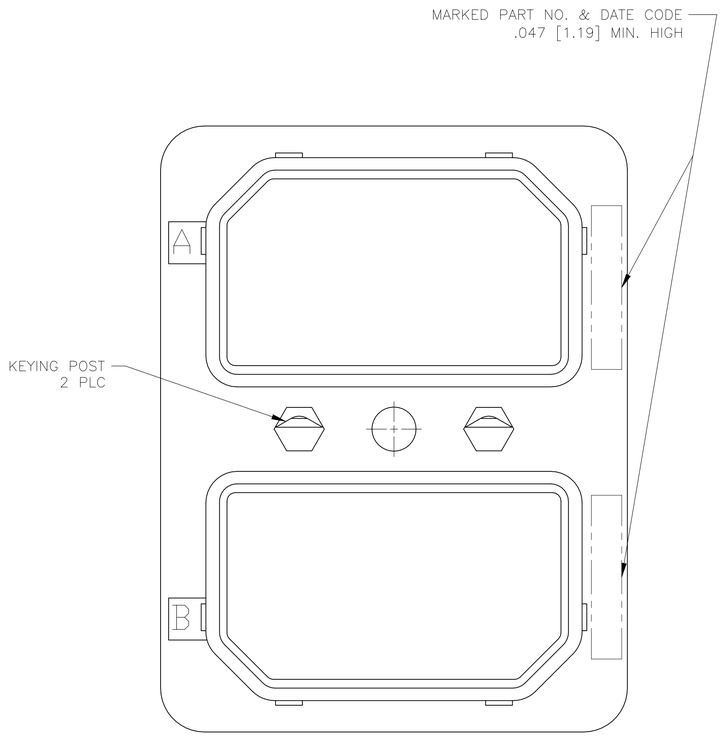

1. MATERIAL & FINISH YELLOW CHROMATE
   SHELL: DIE CAST ALUM. ALLOY PER QQ-A-591 OR
   OR ASTM B211, 6061-T6/6511 OR ASTM B209
   2024-T4/T351
   FINISH: CAD. PLATED PER QQ-P-416, TYPE I, CLASS 2
   YELLOW CHROMATE CONVERSION.
   INSULATOR, HARD: EPOXY PER MIL-M-24325.
   INSULATOR, SOFT: FLUOROSILICONE RUBBER, COLOR: BLUE.
   GROMMET PROTECTOR: ALUM. ALLOY, FINISH: BLUE EPOXY.
   POLARIZING POST & NUTS: STAINLESS STEEL.
   MALE JACKSCREW: STAINLESS STEEL.
   SCREWS & WASHERS: STEEL, CAD. PLATED PER QQ-P-416.
   DUST CAP: CLEAR VINYL.

2. CONTACTS SHOWN IN POSITION FOR ILLUSTRATION ONLY, ARE INCLUDED IN A CONTAINER WITHIN CONNECTOR PACKAGE FOR SHIPMENT, EXCEPT P/N'S 1-207596-1 THRU 2-207596-0.

4. COAX CONTACTS & SEALING BOOTS MUST BE ORDERED SEPARATELY.

5. FOR CONTACT SIZE 22 DIMENSION "B" REPRESENTS PIN CONTACTS & DIMENSION "D" REPRESENTS SOCKET CONTACTS.

6. ALL METRIC DIMENSIONS ARE SHOWN IN PARENTHESIS.

7. FOR MATING CONNECTOR SEE 207595.

8. CONNECTORS ORDERED LESS CONTACTS WILL BE MARKED WITH SAME P/N AS CONNECTORS ORDERED WITH CONTACTS.

"B"				"C"				"D"			
22	20	16	12	22	20	16	12	22	20	16	12
.736 [18.69]	.827 [21.00]	.782 [19.86]	.793 [20.14]	.797 [20.24]	.893 [22.68]	.893 [22.68]	.893 [22.68]	.737 [18.72]	.700 [17.78]	.824 [20.93]	.824 [20.93]
.688 [17.48]	.769 [19.53]	.735 [18.67]	.746 [18.95]	.769 [19.53]	.865 [21.97]	.865 [21.97]	.865 [21.97]	.688 [17.48]	.585 [14.86]	.746 [18.95]	.746 [18.95]

	INSERT ARRANGEMENT			
	26	32C2	67	106
"A" MAX	1.541 [39.14]	1.625 [41.28]	1.425 [36.20]	1.541 [39.14]

	PART NO.	ARRANGEMENT IN MODULE "A"	ARRANGEMENT IN MODULE "B"	PART NO. (LESS CONTACTS) 8	
	207596-1	(106S)	(67P)	1-207596-1	OBSOLETE
OBSOLETE	207596-2	(106S)	(26P)	1-207596-2	OBSOLETE
OBSOLETE	207596-3	(106S)	(106S)	1-207596-3	OBSOLETE
OBSOLETE	207596-4	(106S)	(106P)	1-207596-4	OBSOLETE
	207596-5	(106P)	(106P)	1-207596-5	OBSOLETE
OBSOLETE	207596-6	(106P)	(26S)	1-207596-6	OBSOLETE
OBSOLETE	207596-7	(106P)	(67S)	1-207596-7	OBSOLETE
OBSOLETE	207596-8	(106P)	(67P)	1-207596-8	OBSOLETE
	207596-9	(106P)	(32C2S)	1-207596-9	OBSOLETE
	1-207596-0	(106S)	(32C2P)	2-207596-0	

THIS DRAWING IS A CONTROLLED DOCUMENT.

DIMENSIONS: INCHES

TOLERANCES UNLESS OTHERWISE SPECIFIED:
0 PLC ± –
1 PLC ± –
2 PLC ± –
3 PLC ± .005[0.13]
4 PLC ± –
ANGLES ± –

MATERIAL –
FINISH –

DWN J.KAISER 23-SEP-03
CHK J.MARKEY 23-SEP-03
APVD J.MARKEY 23-SEP-03
PRODUCT SPEC —
APPLICATION SPEC —
WEIGHT 0.000000

TE Connectivity

NAME PLUG CONNECTOR INSTALLATION (WITH CENTER MALE JACKSCREW)

SIZE A1 | CAGE CODE 00779 | DRAWING NO C-207596 | RESTRICTED TO —

CUSTOMER DRAWING | SCALE 3:1 | SHEET 1 OF 1 | REV S

4805 (1/15)