THIS DRAWING IS UNPUBLISHED. RELEASED FOR PUBLICATION 2007
© COPYRIGHT - BY TYCO ELECTRONICS CORPORATION. ALL RIGHTS RESERVED.

LOC	DIST
H	-

REVISIONS

P	LTR	DESCRIPTION	DATE	DWN	APVD
	I	INITIAL DRAWING	08MAR2012	JvdH	TdB

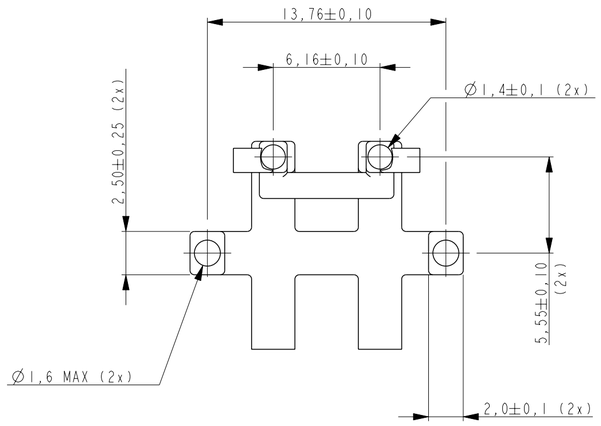

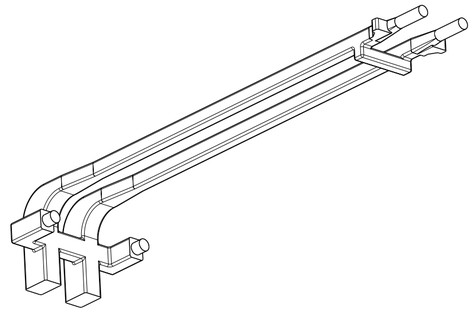

NOTE:

1. MATERIAL: POLYCARBONATE, CLEAR.

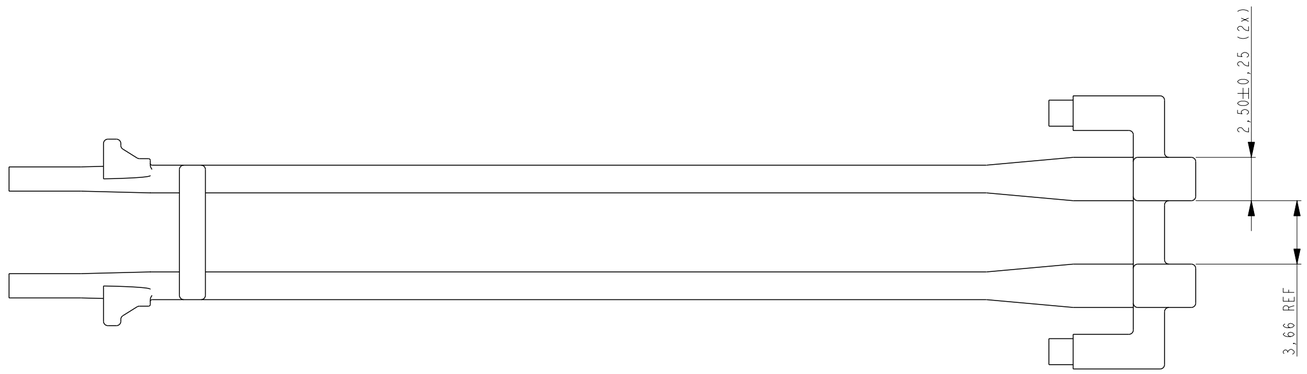

B	A	PART NUMBER
6,00	57,69	2173482-7
6,00	58,49	2173482-3
5,55	57,69	2173482-2
5,55	61,39	2173482-1

PRELIMINARY PART
NOT RELEASED FOR PRODUCTION

THIS PRODUCT HAS NOT COMPLETED VALIDATION TESTING

THIS DRAWING IS A CONTROLLED DOCUMENT.

DIMENSIONS: mm

TOLERANCES UNLESS OTHERWISE SPECIFIED:

0 PLC	±-
1 PLC	±0,5
2 PLC	±0,13
3 PLC	±0,013
4 PLC	±0,0001
ANGLES	±-

MATERIAL: 1 -

FINISH: -

DWN	08 MAR 2012 J.V.D.HEIJDEN
CHK	08 MAR 2012 B.MOOIJ
APVD	09 MAR 2012 T.D.BOER
PRODUCT SPEC	-
APPLICATION SPEC	114-32021
WEIGHT	-

TE Connectivity

NAME: LIGHT PIPE, DOUBLE, BEHIND BEZEL, GANGED zQSFP+
-

SIZE	CAGE CODE	DRAWING NO	RESTRICTED TO
A2	00779	C-2173482	-

CUSTOMER DRAWING | SCALE 4:1 | SHEET 1 OF 1 | REV 1

1471-9 (3/11)

Pro/ENGINEER DRAWING