THIS DRAWING IS UNPUBLISHED. RELEASED FOR PUBLICATION 2006
© COPYRIGHT 2006 BY - ALL RIGHTS RESERVED.

REVISIONS

P	LTR	DESCRIPTION	DATE	DWN	APVD
	A5	ECR-10-009092	22OCT2009	RO	BR
	B	ECR-16-001855	29FEB2016	GCM	JB
	C	ECR-16-014579	25APR2017	GCM	JB
	C1	ECR-17-014011	27MAR2018	SG	MKO

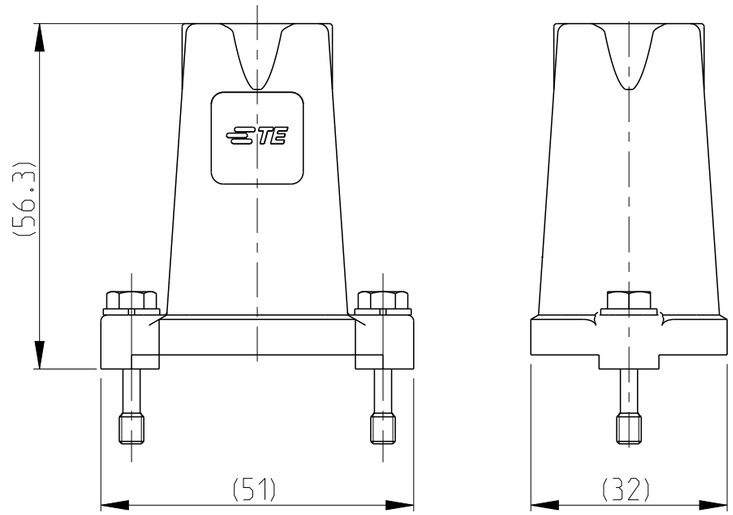

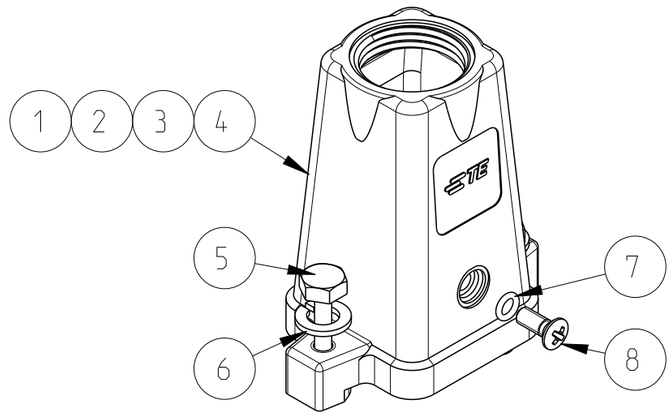

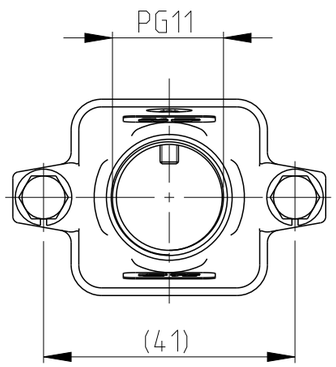

PN 1-5 AS SHOWN

Notes

1 SUITABLE HOUSINGS: SERIES HIP, SIZE 1
CUSTOMER DRAWING 1102600, 1106408

2 STANDARDS:
DIN EN 61984, DIN EN 60664-1

3 TOOL:
PHILLIPS SCREWDRIVER PH1.
HEXAGON SCREWDRIVER 7mm

4 VARNISH ON INSIDE AREA NOT NECESSARY

5 PACKAGING:
10 SETS IN A CARTON, PRE-MOUNTED

PART NO.	ORDERING TEXT
0-1102600-2	HIP-K.3/4.STO.1.11.G
2-1102600-5	HIP-K.3/4.STO.1.11.G
~~1-1102600-5~~	~~HIP.3/4.STO.1.11.G~~

OBSOLETE

PARTS LIST (PER ONE UNIT)

PN/QTY 0-2	2-5	1-5	DESCRIPTION	MATERIAL	COLOR/SURFACE	NOTE	ITEM
1	1	1	SCREW COUNTERSUNK RAISED HEAD	STAINL.STEEL	V2A	M3x8 PH1 DIN EN ISO 7047	8
1	1	1	O - RING	NBR	BLACK	3.0x1.0	7
2	2	2	WASHER, PLAIN	STAINL.STEEL	BLANK	A4, DIN EN ISO 7089, 200HV	6
2	2	2	SCREW, HEXAGON BOLT	STAINL.STEEL	BLANK	M4x22 DIN EN ISO 7964, REDUCED SHUNK	5
1	-	-	CONNECTOR HOUSING	ALU	YELLOW	SERIES HIP-K	4
-	1	-	CONNECTOR HOUSING	ALU	BLACK	SERIES HIP-K	2
-	-	1	CONNECTOR HOUSING	ALU	GREY	SERIES HIP	1

THIS DRAWING IS A CONTROLLED DOCUMENT.

DIMENSIONS: mm

TOLERANCES UNLESS OTHERWISE SPECIFIED:
0 PLC ±-
1 PLC ±-
2 PLC ±-
3 PLC ±-
4 PLC ±-
ANGLES ±1°

MATERIAL -

FINISH -

DWN V.Glumm 06AUG2009
CHK H.Braun 06AUG2009
APVD T.Schnurpfeil 06AUG2009
PRODUCT SPEC -
APPLICATION SPEC -
WEIGHT -

TE Connectivity

NAME CONNECTOR HOUSING ASS'Y, TOP ENTRY SERIES HIP, SIZE 1, PG11
-

SIZE	CAGE CODE	DRAWING NO	RESTRICTED TO
A3	00779	C-1102600	

CUSTOMER DRAWING | SCALE 5:1 | SHEET 1 OF 1 | REV C1

1470-19 (3/13)