© 2020 TE Connectivity. All Rights Reserved.

REVISIONS					
P	LTR	DESCRIPTION	DATE	DWN	APVD
	B3	ADDED BLACK VARIANT	14AUG2015	RRN	PS
	B4	5-2 TO 5-8 PART OBSOLETE	29AUG2020	DV	PS

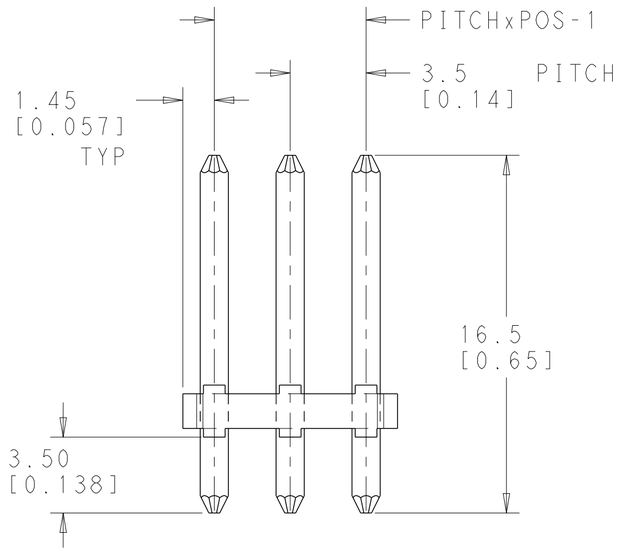

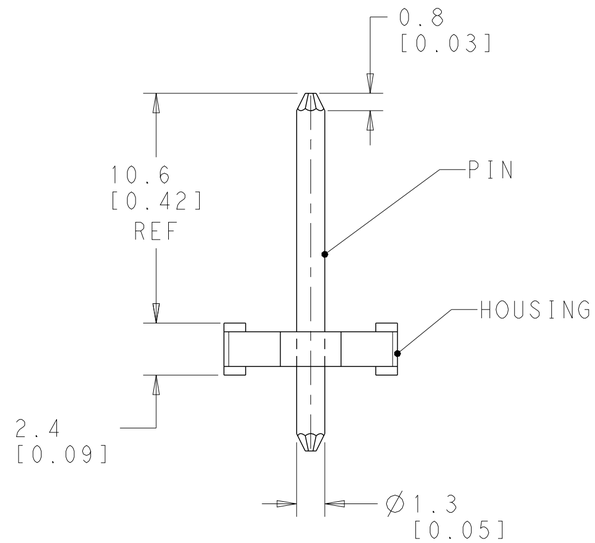

NOTES:

1. MATERIALS:
   HOUSING:PA HIGH TEMP, UL94 V0, COLOUR: SEE TABLE
   PIN: COPPER ALLOY
   PLATING: TIN PLATED

2. MECHANICAL:
   OPERATING TEMPERATURE: -40°C TO +110°C

3. ELECTRICAL:
   VOLTAGE RATING: 150 V
   CURRENT RATING: 2 A
   CONTACT RESISTANCE: 15 mOHM (MAX)
   INSULATION RESISTANCE: 1000 MOHMS (MIN) (500V DC)

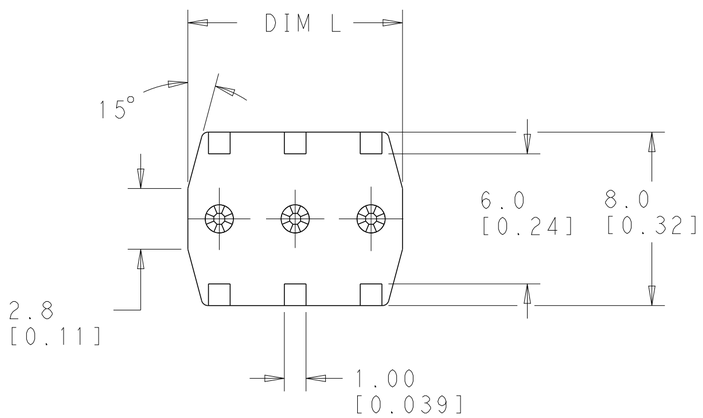

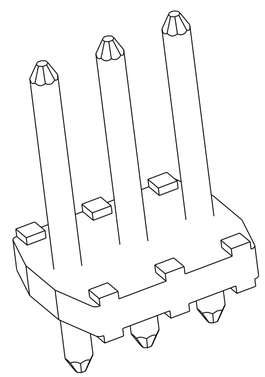

-3 AS SHOWN

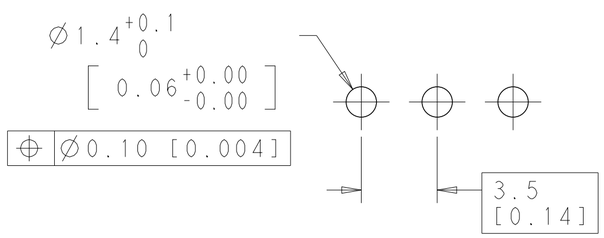

COLOUR	DIM L	POS	PART NO
OBSOLETE	BLACK	27.40[1.078]	8	~~5-1986718-8~~
		23.90[.941]	7	~~5-1986718-7~~
		20.40[.803]	6	~~5-1986718-6~~
		16.90[.665]	5	~~5-1986718-5~~
		13.4[.527]	4	~~5-1986718-4~~
		9.90[.389]	3	~~5-1986718-3~~
		6.40[.252]	2	~~5-1986718-2~~
	GREEN	27.40[1.078]	8	1986718-8
		23.90[.941]	7	1986718-7
		20.40[.803]	6	1986718-6
		16.90[.665]	5	1986718-5
		13.4[.527]	4	1986718-4
		9.90[.389]	3	1986718-3
		6.40[.252]	2	1986718-2

THIS DRAWING IS A CONTROLLED DOCUMENT.

DIMENSIONS: MM [INCH]

TOLERANCES UNLESS OTHERWISE SPECIFIED:
0 PLC ±-
1 PLC ±0.20[.008]
2 PLC ±0.10[.004]
3 PLC ±-
4 PLC ±-
ANGLES ±1°

MATERIAL -

FINISH -

DWN YASHKUMAR 09NOV2011
CHK SARVER MICHAEL 09NOV2011
APVD SARVER MICHAEL 09NOV2011
PRODUCT SPEC -
APPLICATION SPEC -
WEIGHT -

TE Connectivity

NAME MALE CONNECTOR ,UNSHROUDED HEADER WITH WIDE BASE STRAIGHT SIDE STACKABLE, PIN1.3mm DIA, PITCH3.50mm

SIZE A2 | CAGE CODE 00779 | DRAWING NO C-1986718 | RESTRICTED TO

CUSTOMER DRAWING | SCALE 5:1 | SHEET 1 OF 1 | REV B4