THIS DRAWING IS UNPUBLISHED. RELEASED FOR PUBLICATION 20
© COPYRIGHT 20 BY - ALL RIGHTS RESERVED.

REVISIONS

P	LTR	DESCRIPTION	DATE	DWN	APVD
	A	INITIAL RELEASE	16JUN2015	DL	CW
	B	ECR-20-014876	20JUL2021	WQR	CW

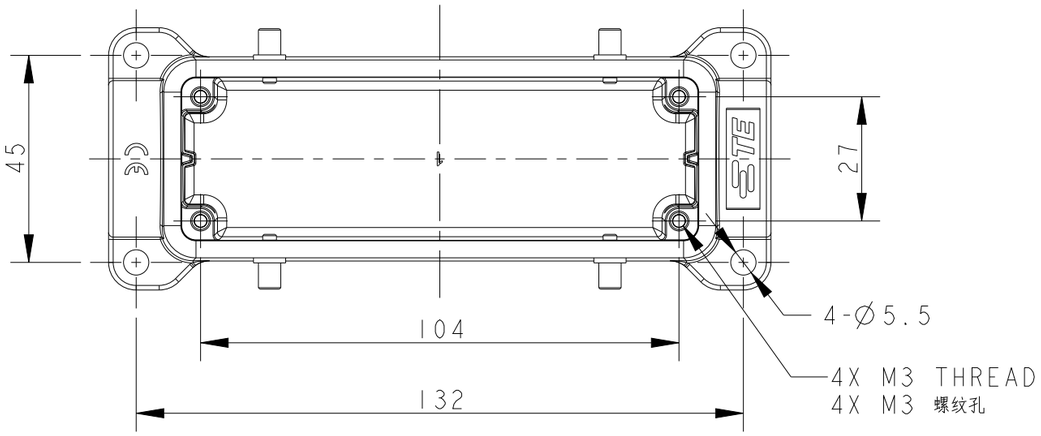

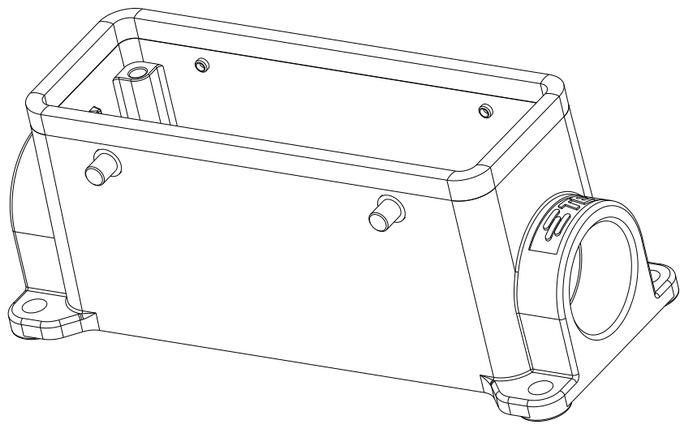

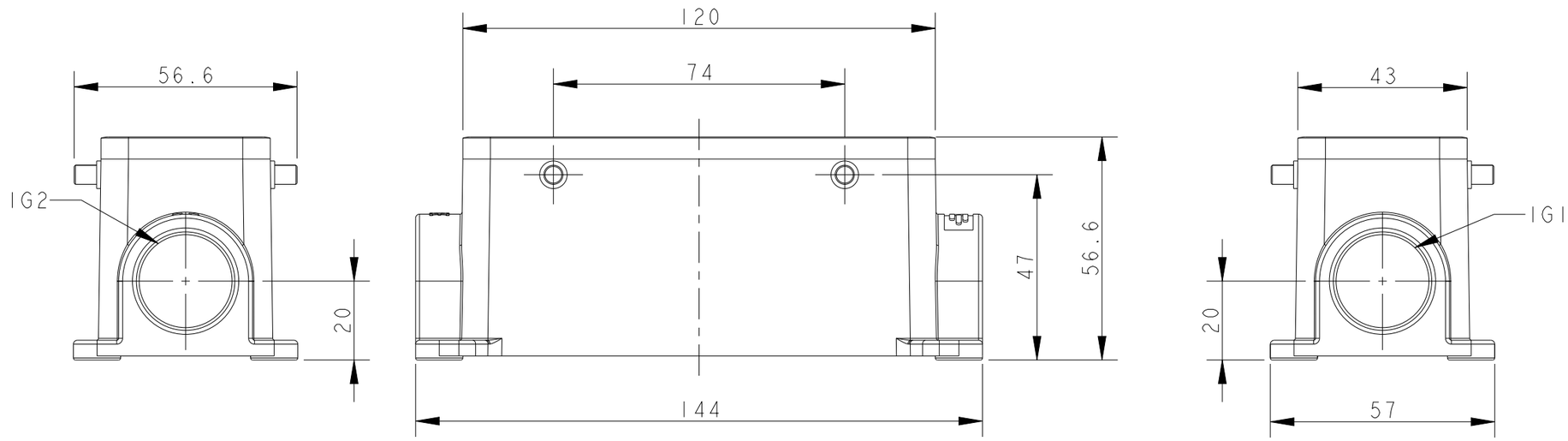

NOTES:
1. TECHNICAL CHARACTERISTICS:
   BODY MATERIAL: DIE CAST ALUMINIUM ALLOY
   SURFACE TREATMENT: POWDER-COATED, GRAY
   DEGREE OF PROTECTION: IP65 (MATED)

注释：
1. 技术参数：
   主体材料： 铝合金
   表面处理： 粉末喷涂， 灰色
   防护等级： IP65(配合)

T1450240121-000	H24B-SGR-BO-PG21	PG21	-
T1450242125-000	H24B-SGR-BO-PG21/M25	PG21	M25
ASSEMBLY PART NUMBER	ASSEMBLY PART DESCRIPTION	IG1	IG2

THIS DRAWING IS A CONTROLLED DOCUMENT.

DIMENSIONS: mm

TOLERANCES UNLESS OTHERWISE SPECIFIED:
0 PLC ±-
1 PLC ±-
2 PLC ±-
3 PLC ±-
4 PLC ±-
ANGLES ±-

MATERIAL - -
FINISH - -

DWN DAVID LI 16JUN2015
CHK CHRIS WANG 16JUN2015
APVD XU XIANG 16JUN2015
PRODUCT SPEC 108-137013
APPLICATION SPEC 114-137013
WEIGHT -

TE Connectivity

NAME H24B-SGR-BO-PG

SIZE A3 | CAGE CODE - | DRAWING NO C-T145024X1XX000 | RESTRICTED TO

CUSTOMER DRAWING | SCALE 3:4 | SHEET 1 OF 1 | REV B

1470-19 (3/13)