REV.	ECN NO.	DATE	SIGN	DESCRIPTION
B	LE3-9A0067	2009/10/13	Li Xiu Zhi	Change Screw Nut

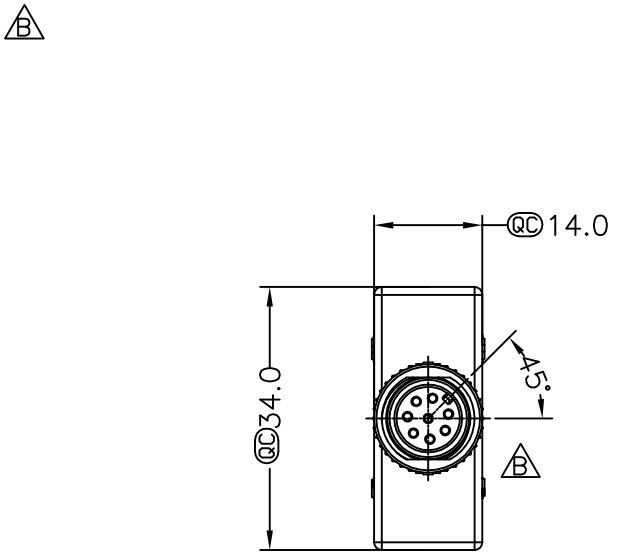

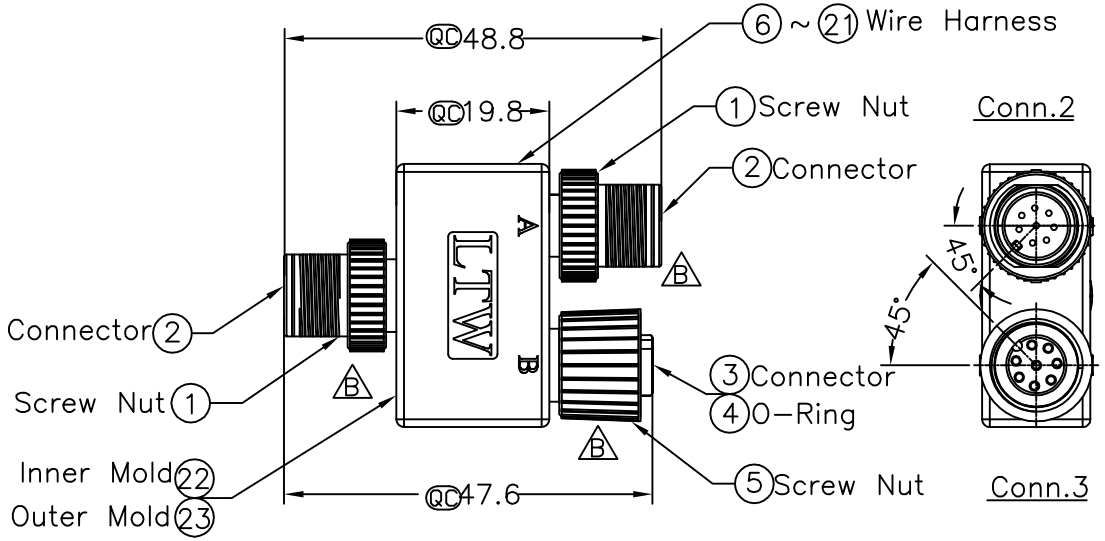

ALTW CONFIDENTIAL
2009.10.13
R&D DEPT.

ALTW DCC. DEPT. CONFIDENTIAL
2009.10.22
ISSUED

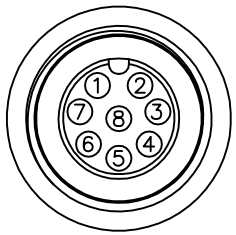

Pin Assignments
Front View 前視圖
Conn.3

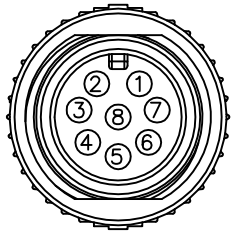

Pin Assignments
Front View 前視圖
Conn.1&Conn.2

Conn.1	Wire Color	Conn.2	Conn.3
8	Orange 橘	8	8
7	Yellow 黃	7	7
6	Gray 灰	6	6
5	Red 紅	5	5
4	Green 綠	4	4
3	Blue 藍	3	3
2	White 白	2	2
1	Black 黑	1	1

Pin Out

Note:
* QC Important Dimension.
* Waterproof Rate:IP68
* Housing:PU,Black
* Male/Female Pin:Copper Alloy,Gold Plated
* O-Ring:Green,Viton
* Screw Nut:ZN-ZDC-3,Nicked Plated
* Wire Harness:UL 1007/TR-64,26#

UNIT:mm

TOLERANCE
.X ±0.25
.XX ±0.1
.XXX ±0.05
ANGLES ±1°

TITLE: M12 8Pin Adaptor

SCALE: Free | SHEET: 1 OF 1 | REV.: B | SIZE: A4 | QC :Inspection Item

Amphenol LTW
安費諾亮泰企業股份有限公司

ITEM NO: SS-080808-MMF-YS001	DRAWN BY: Li Xiu Zhi	DATE: 2009/10/13
DWG NO: SS-080808-MMF-YS001	CHECKED BY: Rita	DATE: 2009/10/14
CUSTOMER: ALTW	APPROVED BY: Lion	DATE: 2009/10/15

THIS DOCUMENT IS SUBJECT TO CHANGE WITHOUT NOTICE. IT IS CONFIDENTIAL AND A PROPERTY OF Amphenol LTW. DISCLOSURE TO THIRD PARTY HAS TO BE AUTHORIZED BY Amphenol LTW.