THIS COPY IS PROVIDED ON A RESTRICTED BASIS AND IS NOT TO BE USED IN ANY WAY DETRIMENTAL TO THE INTERESTS OF PANDUIT CORP.

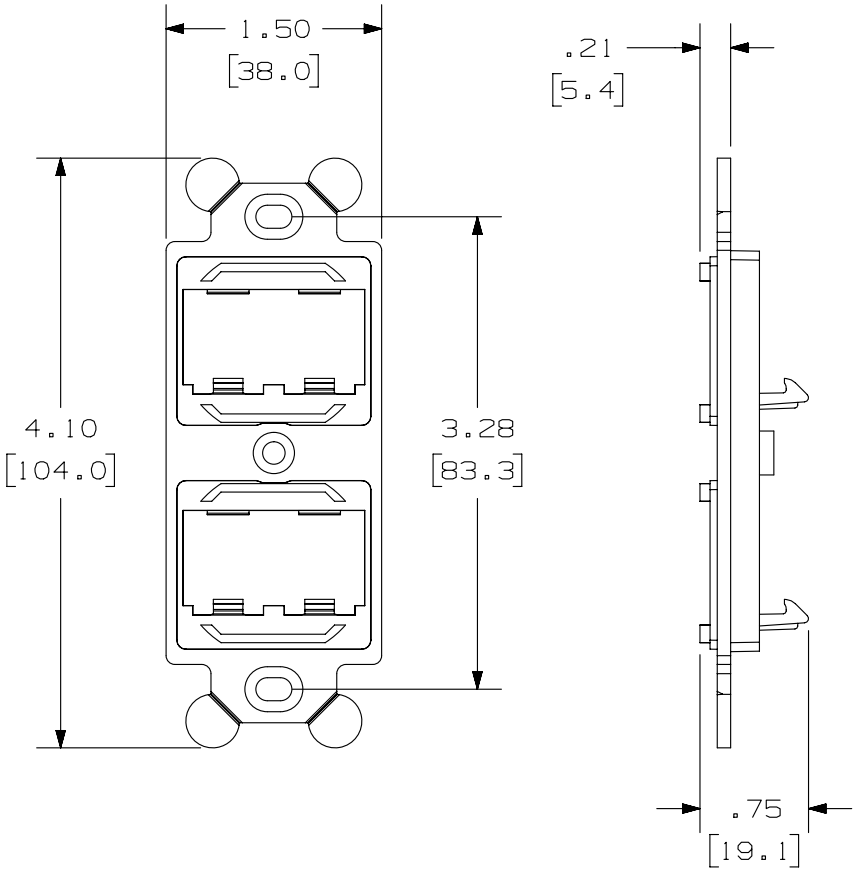

PANDUIT P/N	WEIGHT
CF1064**Y	.29 LB/10 PCS (131.5 g/10 PCS)

NOTES:
1. SEE CURRENT CATALOG FOR ADDITIONAL PART NUMBER SUFFIXES TO INDICATE COLOR AND OR PACKAGE QUANTITY.
2. SEE CATALOG FOR COMPLETE LIST OF PARTS APPLICABLE FOR USE WITH THIS PART.
3. DIMENSIONS IN PARENTHESES ARE IN METRIC.
4. CF1064** INCLUDES:
   1- 106 FRAME
   2- MOUNTING SCREW

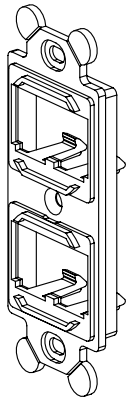

REV	DATE	BY	CHK	APR	DESCRIPTION	ECN
1	3/11/14	JSP	REFR	MMR	A. REVISED DRAWING TITLE BLOCK.	02479-177
R	4-26-06	JSP	MJD	MJD	RELEASED TO PRODUCTION	02479-177

PART NUMBER: CF1064**Y

TITLE: MINI-COM 4 POSITION "106" SERIES FRAME

CUSTOMER DRAWING

ITEM REVISION NAME: M02479GS/00

DATASET FILE NAME: M02479GS_DC177/00B

UNLESS OTHERWISE SPECIFIED, DIMENSIONAL TOLERANCES ARE: IN [mm]
.X ± .1 [2.54] .XXX ± .005 [.127]
.XX ± .01 [.25] ANGLES ± 5 °
THIRD ANGLE PROJECTION

MATERIAL: ABS

DRAWING NUMBER: 02479-177

DRAWN BY	DATE	CHK	SCALE	SHT 1 OF 1	SIZE
JSP	4-26-06	MJD	NONE		A

D10100DA/14