© – TE Connectivity. All Rights Reserved.

REVISIONS					
P	LTR	DESCRIPTION	DATE	DWN	APVD
	V1	REVISED PER ECN-22-177079	29SEP2022	RK	MF

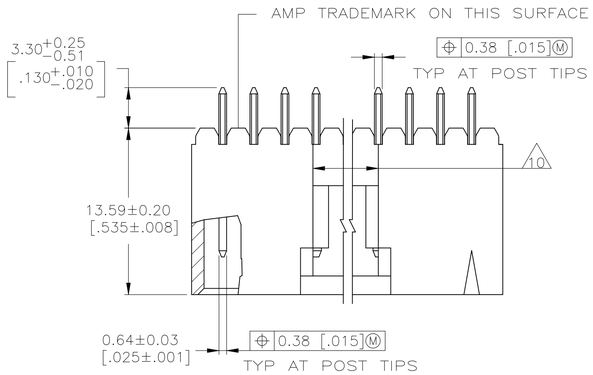

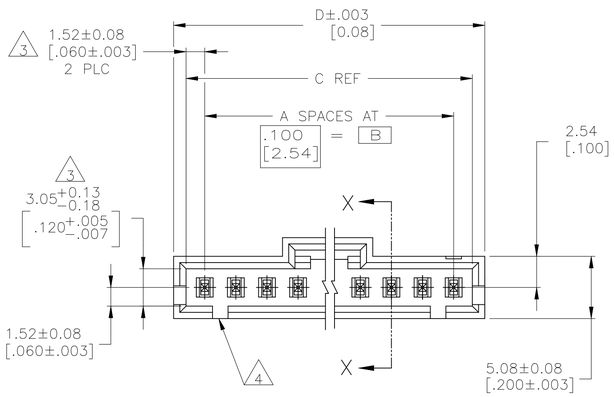

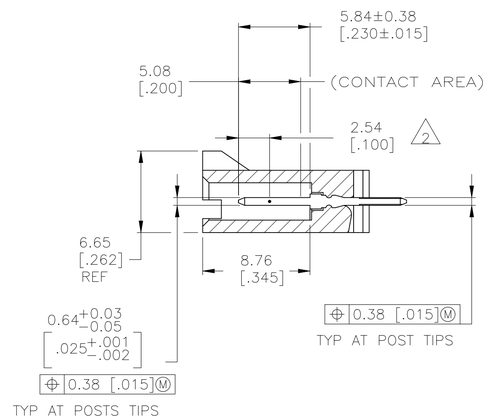

SECTION X–X

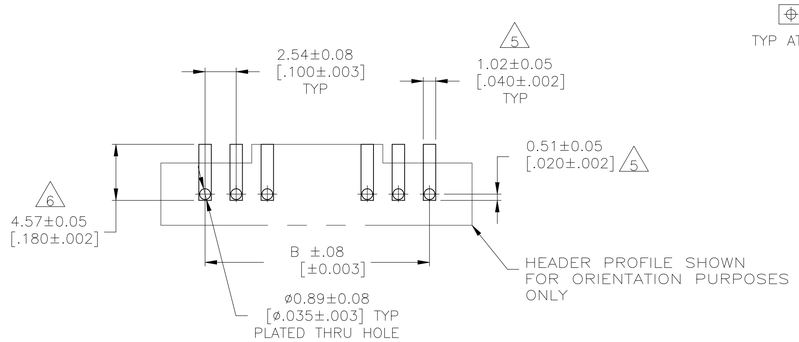

RECOMMENDED PC BOARD MOUNTING DIMENSIONS
RECOMMENDED STENCIL THICKNESS = 0.25 [.010]

1. .000015[0.000381]GOLD IN THE CONTACT AREA, .000100–.000200[0.00254–0.00508] MATTE TIN–LEAD ON THE SOLDER TAIL, ALL OVER .000050[0.00127] NICKEL.
2. POINT OF MEASUREMENT FOR PLATING THICKNESS
3. THE NOTED DIMENSIONS APPLY FROM THE BASIC DIMENSION LINE (NOT THE POST CENTERLINE) TO THE SURFACE INDICATED.
4. ONE POLARIZATION SLOT FOR 2 AND 3 POSITION ASSEMBLIES ONLY.
5. DIMENSIONS NOTED ARE FOR SOLDER STENCIL LAYOUT FOR USE WITH .062±.008 THICK PRINTED CIRCUIT BOARDS
6. PARTS ARE PACKAGED IN GANG OF TUBES
7. OBSOLETE PART NO., REFER TO DWG 104910 FOR POS 13 THRU 25.
8. HOUSING: HIGH TEMPERATURE LCP, COLOR–BLACK.
   POSTS: BRASS.
9. .000015[0.000381]GOLD IN THE CONTACT AREA, .000100–.000200[0.00254–0.00508] MATTE TIN ON THE SOLDER TAIL, ALL OVER .000050[0.00127] NICKEL
10. 0.25 [.010] RECESS PERMISSIBLE IN THIS AREA FOR MOLD SHUT OFF

PLATING	D	C	B	A	NO OF POSN	ASSEMBLY PART NUMBER
9	1.295	1.220	1.100	11	12	6–104363–1
9 9	1.195	1.120	1.000	10	11	6–104363–0
9	1.095	1.020	.900	9	10	5–104363–9
9	.995	.920	.800	8	9	5–104363–8
9	.895	.820	.700	7	8	5–104363–7
9 9	.795	.720	.600	6	7	5–104363–6
9	.695	.620	.500	5	6	5–104363–5
9 9	.595	.520	.400	4	5	5–104363–4
9	.495	.420	.300	3	4	5–104363–3
9 9	.395	.320	.200	2	3	5–104363–2
9	.295	.220	.100	1	2	5–104363–1
	2.595	2.520	2.400	24	25	7 2–104363–4
	2.495	2.420	2.300	23	24	7 2–104363–3
	2.395	2.320	2.200	22	23	7 2–104363–2
	2.295	2.220	2.100	21	22	7 2–104363–1
	2.195	2.120	2.000	20	21	7 2–104363–0
	2.095	2.020	1.900	19	20	7 1–104363–9
	1.995	1.920	1.800	18	19	7 1–104363–8
	1.895	1.820	1.700	17	18	7 1–104363–7
	1.795	1.720	1.600	16	17	7 1–104363–6
	1.695	1.620	1.500	15	16	7 1–104363–5
	1.595	1.520	1.400	14	15	7 1–104363–4
	1.495	1.420	1.300	13	14	7 1–104363–3
	1.395	1.320	1.200	12	13	7 1–104363–2
1	1.295	1.220	1.100	11	12	1–104363–1
1 1	1.195	1.120	1.000	10	11	1–104363–0
1	1.095	1.020	.900	9	10	104363–9
1 1	.995	.920	.800	8	9	104363–8
1	.895	.820	.700	7	8	104363–7
1 1	.795	.720	.600	6	7	104363–6
1	.695	.620	.500	5	6	104363–5
1 1	.595	.520	.400	4	5	104363–4
1	.495	.420	.300	3	4	104363–3
1 1	.395	.320	.200	2	3	104363–2
1	.295	.220	.100	1	2	104363–1

THIS DRAWING IS A CONTROLLED DOCUMENT.

DIMENSIONS: mm [INCHES]

TOLERANCES UNLESS OTHERWISE SPECIFIED:
0 PLC ± –
1 PLC ± –
2 PLC ± –
3 PLC ± .005
4 PLC ± –
ANGLES ± –

MATERIAL 8

FINISH SEE TABLE

DWN G DOUTY 22FEB88
CHK T C CLARK 22FEB88
APVD –
PRODUCT SPEC –
APPLICATION SPEC –
WEIGHT –

TE Connectivity

NAME HEADER ASSY, AMPMODU MTE, VERTICAL, SINGLE ROW, .100 C/L, .025 SQ POSTS, POLARIZED WITH LATCHING

SIZE A1 | CAGE CODE – | DRAWING NO C-104363 | RESTRICTED TO –

CUSTOMER DRAWING | SCALE 4:1 | SHEET 1 OF 1 | REV V1

4805 (1/15)