THIS DRAWING IS UNPUBLISHED.
VERTRAULICHE UNVEROEFFENTLICHTE ZEICHNUNG
RELEASED FOR PUBLICATION ,1997
FREI FUER VEROEFFENTLICHUNG
© COPYRIGHT 1997 BY AMP INCORPORATED. ALL RIGHTS RESERVED.
ALLE RECHTE VORBEHALTEN

MATED WITH:
PASSEND ZU:
Bg 1

LOC	DIST
AI	–

PROJEKT NR.:
–

REVISIONS
AENDERUNGEN

P	LTR	DESCRIPTION BESCHREIBUNG	DATE	DWN	APVD
	A8	Text for packaging corrected ECR-08-001492	17.01.08	SR	ST

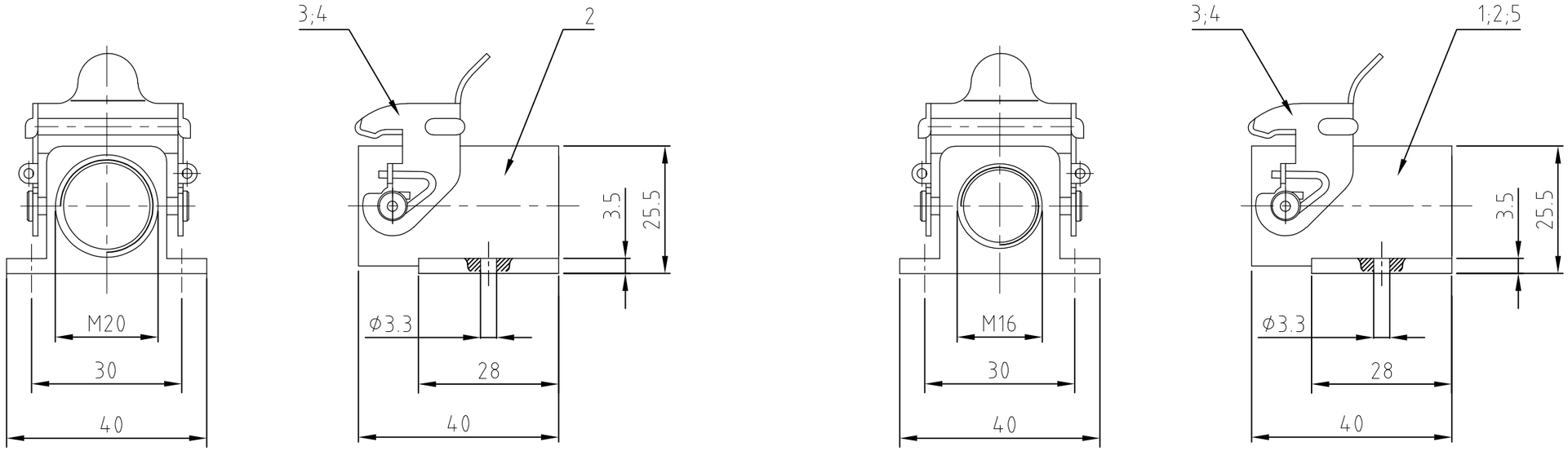

Notes

1. Material: zink diecast
2. Surface: - varnish grey
   - varnish black
3. Varnish on the inside not necessarily
4. Special packing
   Packaging quantity 100 pieces
5. Packaging quantity 10 pieces

1					surface mounted housing side entry	zink diecast	blue pasivation	without varnish	5	
			1		side clip	stainless steel			4	
1	1	1		1	side clip	steel	zink plated	blue	3	
			1		surface mounted housing side entry	zink diecast		black	2	
	1	1		1	surface mounted housing side entry	zink diecast		grey	1	
0-5	0-4	0-3	0-2	0-1	DESCRIPTION / BENENNUNG	MATERIAL	SURFACE / OBERFLÄCHE	COLOR / FARBE	ITEM NO. POS.	NOTES

5	4	5	5	5
HA-EMV-K.3.SG-LB.1.M16.G	HA.3.SG-LB.1.M16.G.KM	HA.3.SG-LB.1.M20.G	HA-K.3.SG-LB.1.M16.G	HA.3.SG-LB.1.M16.G

ORDERING TEXT / BESTELLTEXT

THIS DRAWING IS A CONTROLLED DOCUMENT FOR AMP INCORPORATED.
IT IS SUBJECT TO CHANGE AND THE CONTROLLING ENGINEERING ORGANIZATION SHOULD BE CONTACTED FOR THE LATEST REVISION.
DIESES ZEICHNUNGSDOKUMENT WIRD DURCH AMP INCORPORATED KONTROLLIERT.
AENDERUNGEN, DIE DEM TECHNISCHEN FORTSCHRITT DIENEN, SIND VORBEHALTEN.
DEN JEWEILS LETZTGUELTIGEN AENDERUNGSSTAND ERFAHREN SIE AUF ANFRAGE.

DIMENSIONS:
DIMENSIONEN:
mm

TOLERANCES UNLESS OTHERWISE SPECIFIED:
ALLGEMEINTOLERANZEN
n. ISO 8015
n. ISO 2768 - mH -E
n. DIN 16901 - 140
0 PLC #-
1 PLC #-
2 PLC #-
3 PLC #-
ANGLES /WINKEL #-

MATERIAL 1

FINISH /OBERFLAECHE/FARBE 2

DWN Schneider 15.08.01
CHK Schnurpfeil 15.08.01
APVD –
PRODUCT SPEC PRODUKTSPEZ. –
APPLICATION SPEC VERARBEITUNGSSPEZ. –
WEIGHT GEWICHT –

Tyco Electronics
HTS Elektrotechnik
53819 Neunkirchen, Germany

NAME
SURFACE MOUNTED HOUSING SIDE ENTRY
Sockelgehäuse HA.3.1.M16

SIZE	CAGE CODE	DRAWING NO ZEICHNUNGS-NR.	RESTRICTED TO NUR FUER
A3	00779	C-1106404	–

CUSTOMER DRAWING /KUNDENZEICHNUNG
MASSSTAB 1:1 BLATT 1 OF VON 1 REV A8

AMP 1470-19 REV 27JUN96
This is a TRANSLATED file from Computervision, Inc., Medusa Revision 12.2.5T