THIS DRAWING IS UNPUBLISHED.
VERTRAULICHE UNVEROEFFENTLICHTE ZEICHNUNG
© COPYRIGHT — TE Connectivity

RELEASED FOR PUBLICATION:
FREI FUER VEROEFFENTLICHUNG
ALL RIGHTS RESERVED:
ALLE RECHTE VORBEHALTEN.

MATED WITH:
PASSEND ZU:
Bg6

REVISIONS
ABNDERUNGEN

P	LTR	DESCRIPTION BESCHREIBUNG	DATE	DWN	APVD
	C2	REVISED PER ECR-17-014013	09FEB2018	SRG	MKO

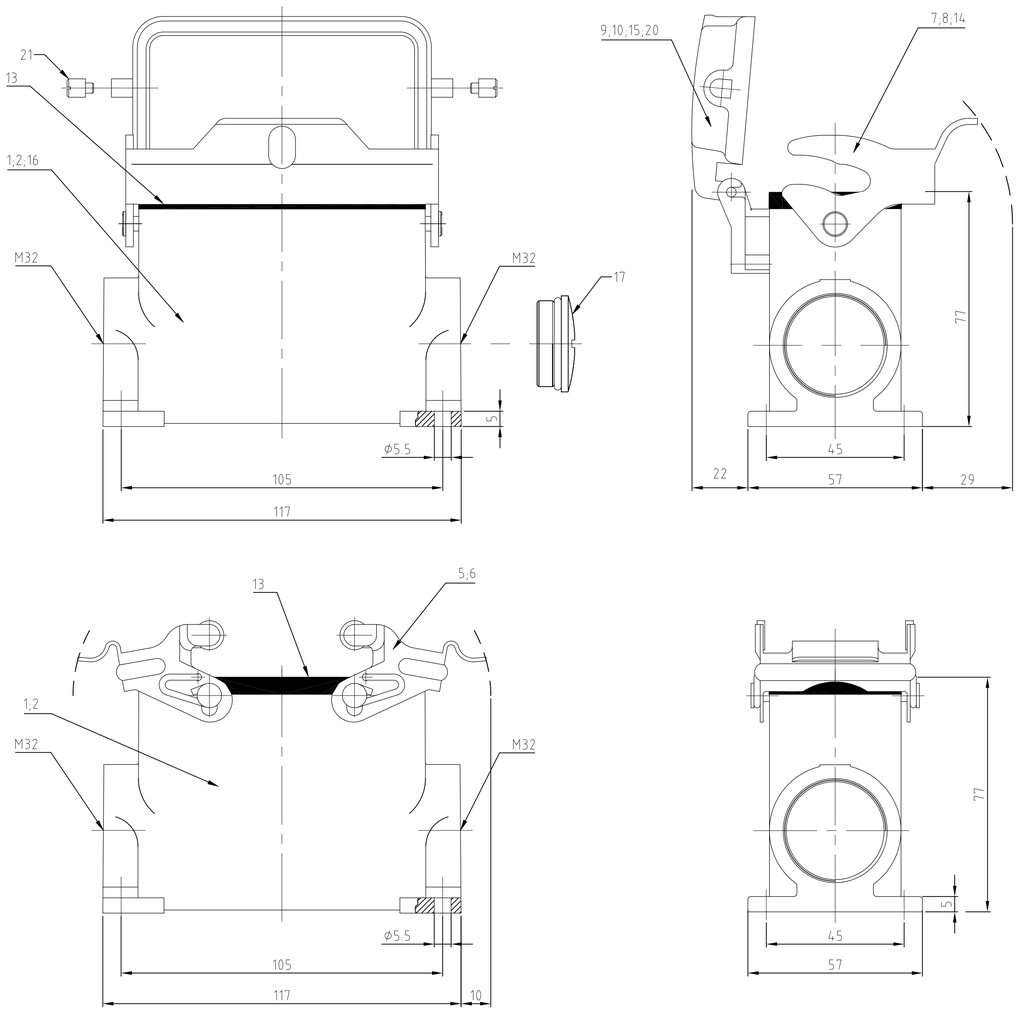

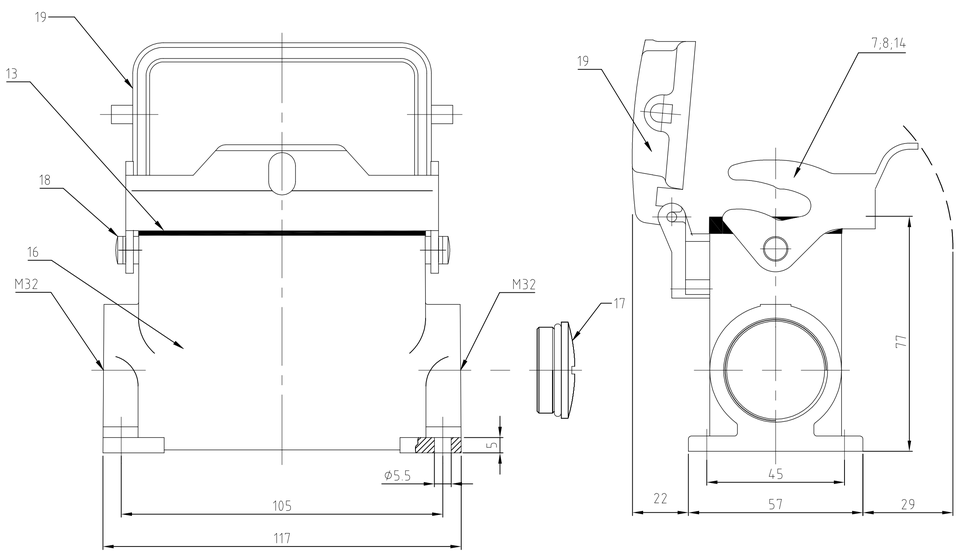

NOTES:

1 Material: Housing: aluminium diecasting alloy
Seals: NEOPRENE

2 SURFACE: VARNISH- GREY
- ALUMINIUM OXID +
VARNISH BLACK

3 PACKAGING:
PACKAGING QUANTITY: 5 PIECES

4 SPECIAL PACKAGING: Krauss-Maffei
PACKAGING UNIT: 55 PIECES IN Krauss-Maffei-Box

5 VARNISH ON THE INSIDE NOT NECESARILY

1-4	1-3	1-2	1-1	0-9	1-0	0-6	0-2	0-7	0-3	0-8	0-4	0-5	0-1	DESCRIPTION	MATERIAL	SURFACE	COLOR	ITEM No.	
OBSOLETE			OBSOLETE	OBSOLETE	OBSOLETE		OBSOLETE	OBSOLETE	OBSOLETE			OBSOLETE	OBSOLETE						
						2								clip bolt	stainless steel			21	
						1								cover	aluminium/ALU	aluminium oxid	black	20	
1														cover	aluminium/ALU		grey	19	Neutral
2														clip bolt	steel	zink plated	blue	18	M5
1	1													Blanking Piece with Seal	steel		blue	17	M32
1	1													Surface mounted housing side entry	aluminium/ALU		grau	16	Neutral
			1											cover	aluminium/ALU		red	15	
			1											Surface mounted housing side entry	aluminium/ALU		red	14	
1	1	1	1	1	1	1	1	1	1	1	1	1	1	profile seal	Neoprene		black	13	
				2										central clip bolt	stainless steel	blank		12	
					2									central clip bolt	steel	zink plated	blau/blue	11	
						1						1		cover	aluminium/ALU	aluminium oxid	black	10	
							1						1	cover	aluminium/ALU		grey	9	
								1						side clip	stainless steel	blank		8	
1	1		1				1		1					side clip	steel	zink plated	blue	7	
										2				locking clip	stainless steel	blank		6	
		2									2			locking clip	steel	zink plated	blue	5	
												4		clip bolt	stainless steel	blank		4	
													4	clip bolt	steel	zink plated	blue	3	
				1		1		1		1		1		Surface mounted housing side entry	aluminium/ALU	aluminium oxid	black	2	
		1			1		1		1		1		1	Surface mounted housing side entry	aluminium/ALU		grey	1	
3	3	4	3	3	3	3	3	3	3	3	3	3	3						
HD.40.SGD-LB.2.M32.Z-BS.	HD.40.SG-LB.2.M32.Z-BS	HD.40.SG-VS.2.M32.Z.KM	HD.40.SGD-LB.2.M32.Z	HD-K.Z.40.SG-ZVGR.2.M32.Z	HD-Z.40.SG-ZVGR.2.M32.Z	HD-K.40.SGD-LB.2.M32.Z	HD.40.SGD-LB.2.M32.Z	HD-K.40.SG-LB.2.M32.Z	HD.40.SG-LB.2.M32.Z	HD-K.40.SG-VS.2.M32.Z	HD.40.SG-VS.2.M32.Z	HD-K.40.SGD.2.M32.Z	HD.40.SGD.2.M32.Z	DESCRIPTION					

THIS DRAWING IS A CONTROLLED DOCUMENT.
DIESE ZEICHNUNG IST EIN KONTROLLIERTES DOKUMENT.

DIMENSIONS: MASSEINHEITEN mm

TOLERANCES UNLESS OTHERWISE SPECIFIED: ALLGEMEINTOLERANZEN
0 PLC ± -
1 PLC ± -
2 PLC ± -
3 PLC ± -
4 PLC ± -
ANGLES / WINKEL ± -

MATERIAL –

FINISH / OBERFLAECHE / FARBE –

DWN Schneider 04.06.02
CHK Schweiger 04.06.02
APVD –
PRODUCT SPEC PRODUKTSPEZ. –
APPLICATION SPEC VERARBEITUNGSSPEZ. –
WEIGHT GEWICHT –

TE Connectivity Ltd.

NAME
Surface mounted housing side entry
Sockelgehaeuse HD.40.SG/SGD.2.M32.Z
–

SIZE	CAGE CODE	DRAWING NO ZEICHNUNGS-NR.	RESTRICTED TO NUR FUER
A1	00779	C-1106451	–

CUSTOMER DRAWING / KUNDENZEICHNUNG

SCALE MASSSTAB	SHEET BLATT	OF VON	REV
1:1	1	1	C2