DATE	REV	ECN	APP'D. BY
03/08/18	A0	Released	TM

ISOMETRIC VIEW

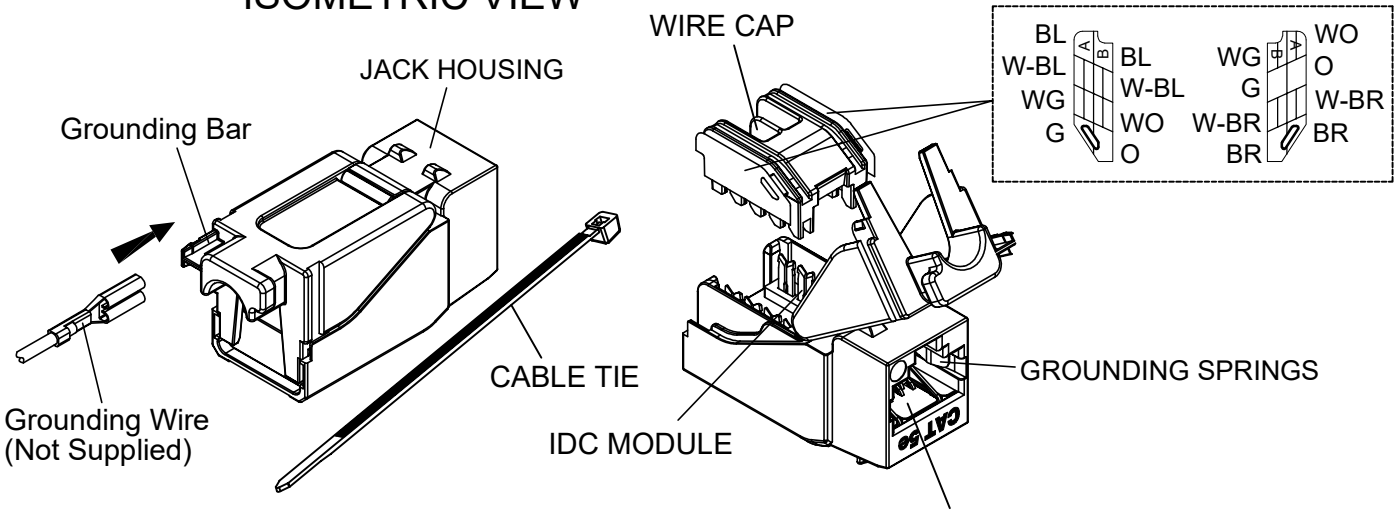

ASSEMBLY DIMENSION

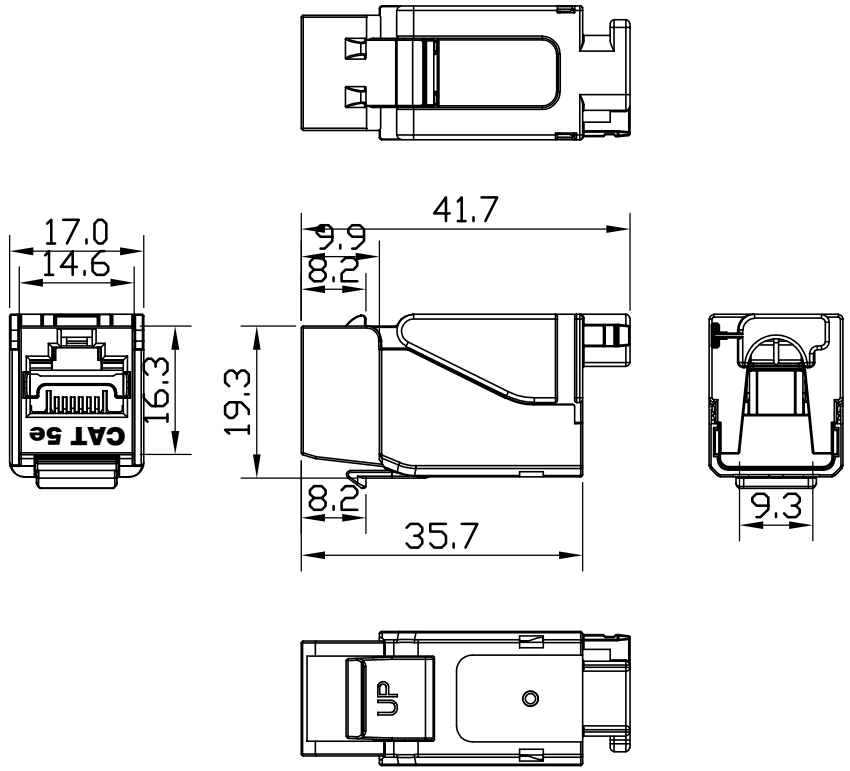

TRANSMISSION PERFORMANCE
Meet all requirements specified in connecting hardware requirement of ANSI/TIA-568-C.2, Category 5e

ELECTRICAL
Electrical Insulation Resistance : 500 MΩ min. @ 100V d.c
Dielectric Withstanding Voltage : 1000V d.c. or a.c. Peak Contact to Contact @ 60Hz for 1 minute,1500V d.c. or a.c. Peak Contact to Panel @ 60Hz for 1 minute

MECHANICAL
Insertion / Extraction Life : 750 Cycles Minimum
IDC Wire Gauge : 22 ~ 24 AWG

PHYSICAL
Housing : Zinc-alloy fully shielded
Spring Wire : Phosphor Bronze Alloy Plated With 50 micro-inch of Gold
IDC : Phosphor Bronze Alloy With 100 micro-inch 100% Sn Alloy

COMPONENTS

ITEM	DISCRIPTION	Q'TY
7	CABLE TIE	1
6	WIRING LABEL	2
5	GROUNDING SPRINGS	1
4	IDC MODULE	1
3	WIRE CAP	1
2	INSERT MODULE	1
1	JACK HOUSING	1

SS-82100-005
PART NUMBER

RoHS 2002/95/EC

THIRD ANGLE PROJECTION

DO NOT SCALE DRAWING
DRAWING IS SUBJECT TO CHANGE WITHOUT NOTICE
DIMENSIONS: METRIC
UNLESS OTHERWISE SPECIFIED TOLERANCES ARE ±0.2 ANGLES ARE ± 1°
SHEET NO. 1 OF 1

206 Van Vorst Street
Jersey City, NJ 07302
+1 201 432 0463
http://www.belfuse.com

TITLE: CAT 5e SHIELDED TOOL-LESS KEYSTONE JACK

THIS DRAWING AND THE SUBJECT MATTER SHOWN THEREON ARE CONFIDENTIAL AND THE PROPRIETARY PROPERTY OF BEL FUSE, INC. AND SHALL NOT BE REPRODUCED, COPIED, OR USED IN ANY MANNER WITHOUT PRIOR WRITTEN CONSENT OF BEL FUSE, INC.

DRN BY:	DG	DATE	03/06/18
APPD BY:	TM	DATE	03/08/18
DWG NO.	CT820022	REV.	A0