MATERIAL NUMBER	OLD PART NUMBER
130035-0031	61451-ESOUT

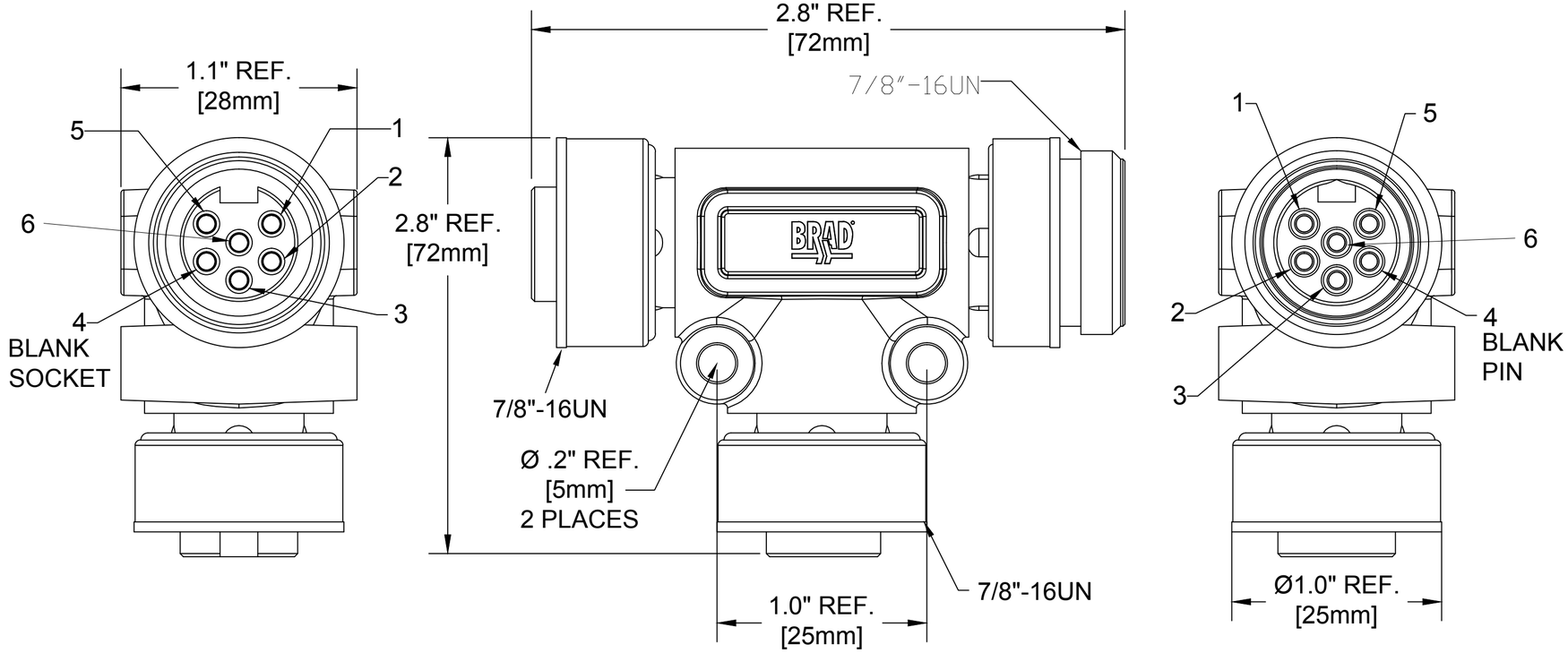

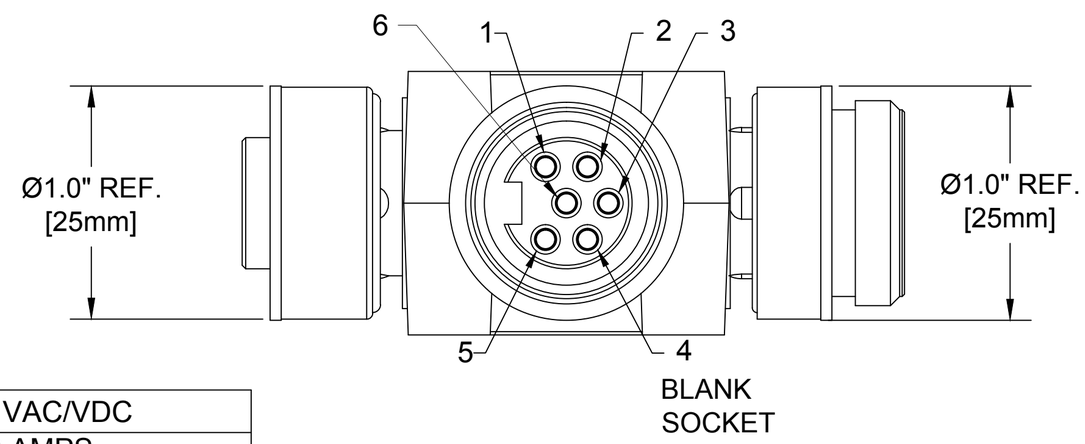

SCHEMATIC

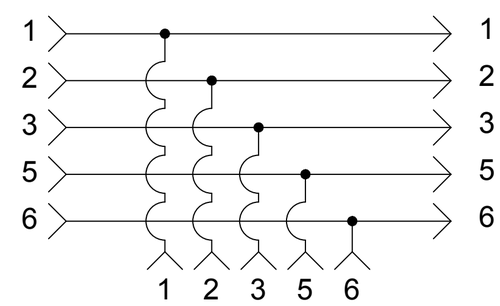

PIN 4 NO CONNECTED

VOLTAGE RATING	600 VAC/VDC
AMPERAGE RATING	8 AMPS
PROTECTION	IP67
OPERATING TEMPERATURE	-20°C TO 80°C

COMPONENT	MATERIAL	FINISH
INSERT	PVC	YELLOW
CONTACT SOCKET	COPPER ALLOY	GOLD OVER NICKEL
CONTACT PIN	COPPER ALLOY	GOLD OVER NICKEL
COUPLING NUT	ZINC DIE CAST	BLACK E-COATED
OVERMOLD	RITEFLEX	BLACK

RELEASE
EC NO: IPG2014-0871
DRWN: BWOODMAN2010/05/19
CH'KD: BARDEN ----
APPR: BWOODMAN2013/11/20
DESCRIPTION
REV
A

QUALITY SYMBOL
▼=0
C=0

GENERAL TOLERANCES (UNLESS SPECIFIED)	mm	INCH
4 PLACES	±---	±---
3 PLACES	±---	±.005
2 PLACES	±0.13	±.010
1 PLACE	±0.25	±.020
ANGULAR ±1/2°		

DRAFT WHERE APPLICABLE MUST REMAIN WITHIN DIMENSIONS

DIMENSION STYLE: IN/MM
SCALE: NTS
DESIGN UNITS: INCH
THIRD ANGLE PROJECTION

DRAWN BY: BWOODMAN DATE: 2010/05/19
CHECKED BY: BARDEN DATE: 2013/11/21
APPROVED BY: BWOODMAN DATE: 2013/11/20

TITLE: MINI-CHANGE 6-POLE TEE ESTOP-OUT TEE WITH PIN 4 BLANK

molex MOLEX INCORPORATED

MATERIAL NO.: SEE CHART
DOCUMENT NO.: SD-130035-011
SHEET NO.: 1 0F 1
SIZE: C

THIS DRAWING CONTAINS INFORMATION THAT IS PROPRIETARY TO MOLEX INCORPORATED AND SHOULD NOT BE USED WITHOUT WRITTEN PERMISSION