40V HIGH CURRENT LOW LEAKAGE SCHOTTKY DIODE

Product Summary

V_{RRM} (V)	I_O (A)	V_F Max (V) @ +25°C	I_R Max (µA) @ 30V +25°C
40	2	0.54	40

Features and Benefits

- Low Equivalent On Resistance
- Extremely Low Leakage
- Low V_F, Fast Switching Schottky
- Package Thermally Rated to +150°C
- **Totally Lead-Free & Fully RoHS Compliant (Notes 1 & 2)**
- **Halogen and Antimony Free. "Green" Device (Note 3)**
- **Qualified to AEC-Q101 Standards for High Reliability**
- **PPAP Capable (Note 4)**

Description and Applications

A surface mount Schottky Barrier Diode featuring low forward voltage drop suitable for high frequency rectification and reverse voltage protection.

- DC-DC Converters
- Strobes
- Mobile Phones
- Charging Circuits
- Motor Control

Mechanical Data

- Case: SOT26
- Case Material: Molded Plastic, "Green" Molding Compound; UL Flammability Classification Rating 94V-0
- Moisture Sensitivity: Level 1 per J-STD-020
- Terminals: Matte Tin Finish Annealed over Copper Leadframe; (Lead-Free Plating) Solderable per MIL-STD-202, Method 208 e3
- Weight: 0.016 grams (Approximate)

SOT26

Top View

Device Symbol

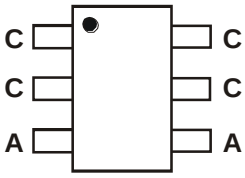

Top View
Pin Out

Ordering Information (Note 5)

Part Number	Package	Shipping
ZLLS2000QTA	SOT26	3,000/Tape & Reel
ZLLS2000QTC	SOT26	10,000/Tape & Reel

Notes:
1. No purposely added lead. Fully EU Directive 2002/95/EC (RoHS), 2011/65/EU (RoHS 2) & 2015/863/EU (RoHS 3) compliant.
2. See https://www.diodes.com/quality/lead-free/ for more information about Diodes Incorporated's definitions of Halogen- and Antimony-free, "Green" and Lead-free.
3. Halogen- and Antimony-free "Green" products are defined as those which contain <900ppm bromine, <900ppm chlorine (<1500ppm total Br + Cl) and <1000ppm antimony compounds.
4. Automotive products are AEC-Q101 qualified and are PPAP capable. Refer to https://www.diodes.com/quality/.
5. For packaging details, go to our website at https://www.diodes.com/design/support/packaging/diodes-packaging/.

Marking Information

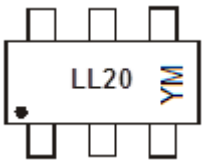

LL20 = Product Type Marking Code
YM = Date Code Marking
Y or $\overline{Y}$ = Year (ex: G = 2019)
M or $\overline{M}$ = Month (ex: 9 = September)

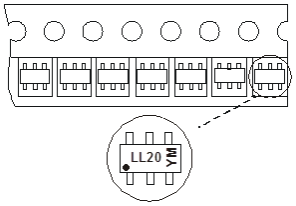

Date Code Key

Year	2016	2017	2018	2019	2020	2021	2022	2023	2024	2025	2026
Code	D	E	F	G	H	I	J	K	L	M	N

Month	Jan	Feb	Mar	Apr	May	Jun	Jul	Aug	Sep	Oct	Nov	Dec
Code	1	2	3	4	5	6	7	8	9	O	N	D

© Diodes Incorporated

Maximum Ratings (@T_A = +25°C, unless otherwise specified.)

Characteristic	Symbol	Value	Unit
Continuous Reverse Voltage	V_{RRM}	40	V
Forward Current	I_F	2.2	A
Peak Repetitive Forward Current Rectangular Pulse Duty Cycle	I_{FPK}	3.55	A
Non Repetitive Forward Current t ≤ 10ms	I_{FSM}	12	A

Thermal Characteristics

Characteristic	Symbol	Value	Unit
Power Dissipation @T_A = +25°C Single Die Continuous Single Die Measured at t < 5s	P_D	1.1 1.71	W W
Junction to Ambient (Note 6)	$R_{\theta JA}$	113	°C/W
Junction to Ambient (Note 7)	$R_{\theta JA}$	73	°C/W
Storage Temperature Range	T_{STG}	-55 to +150	°C
Junction Temperature	T_J	+150	°C

Notes: 6. For a device surface mounted on 25mm × 25mm FR-4 PCB with high coverage of single sided 1oz copper, in still air conditions.
7. For a device mounted on FR-B PCB measured at t < 5s.

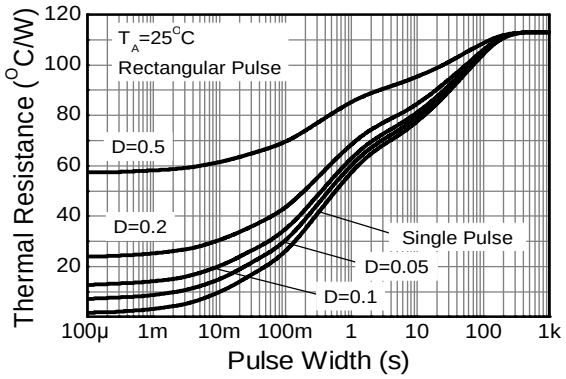

Transient Thermal Impedance

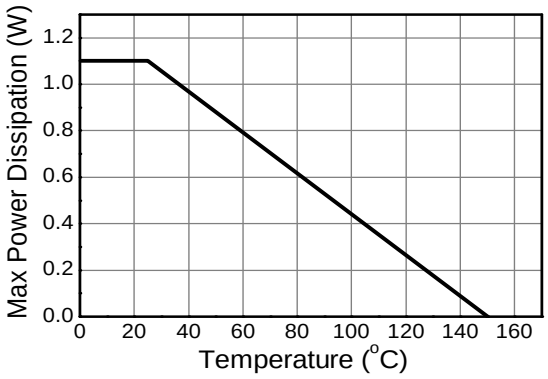

Derating Curve

Electrical Characteristics (@T_A = +25°C, unless otherwise specified.)

Characteristic	Symbol	Min	Typ	Max	Unit	Test Condition
Reverse Breakdown Voltage	$V_{(BR)R}$	40	—	—	V	I_R = 1mA
Forward Voltage (Note 8)	V_F	—	285	—	mV	I_F = 50mA
		—	305	—		I_F = 100mA
		—	335	—		I_F = 250mA
		—	365	390		I_F = 500mA
		—	403	430		I_F = 1A
		—	433	490		I_F = 1.5A
		—	461	540		I_F = 2A
		—	509	600		I_F = 3A
		—	450	—		I_F = 2A, T_A = +100°C
Reverse Current	I_R	— —	10 0.6	40 —	µA mA	V_R = 30V V_R = 30V, T_A = +85°C
Diode Capacitance	C_D	—	65	—	pF	f = 1MHz, V_R = 30V
Reverse Recovery Time	t_{RR}	—	6	—	ns	I_F = 0.5A, I_R = 1.0A, I_{RR} = 0.25A

Note: 8. Measured under pulsed conditions. Pulse width = 300µs. Duty cycle < 2%.

© Diodes Incorporated

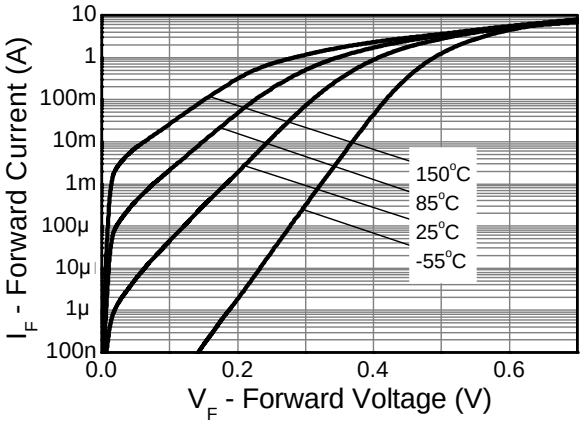

I_F v V_F

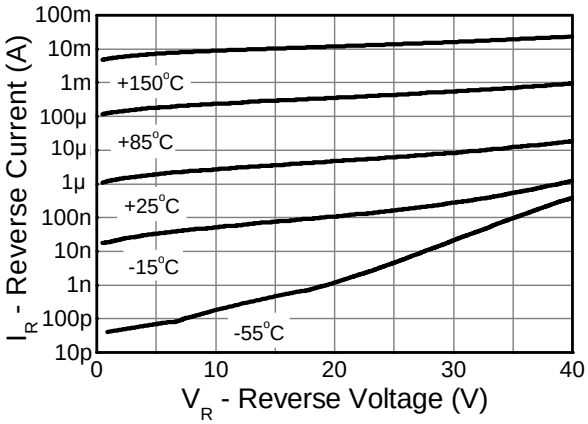

I_R v V_R

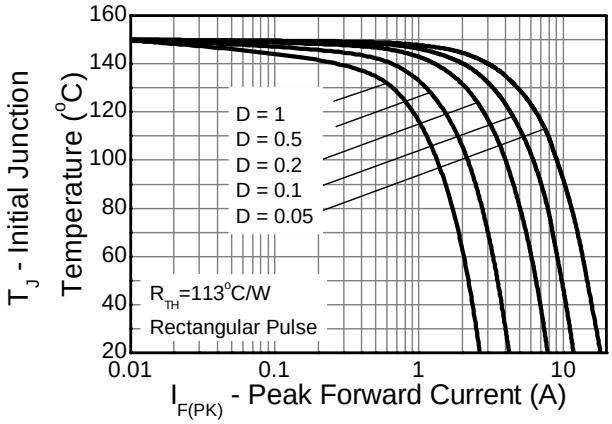

T_J v $I_{F(PK)}$

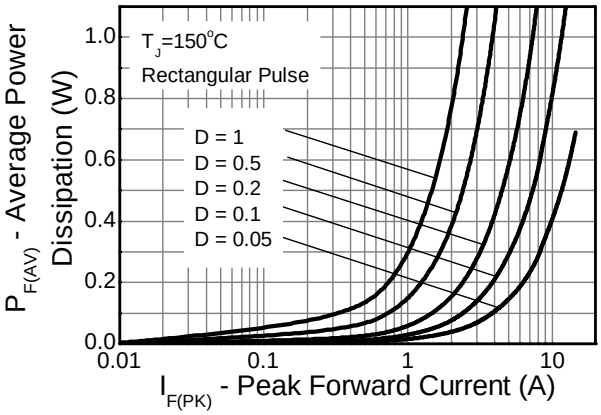

$P_{F(AV)}$ v $I_{F(PK)}$

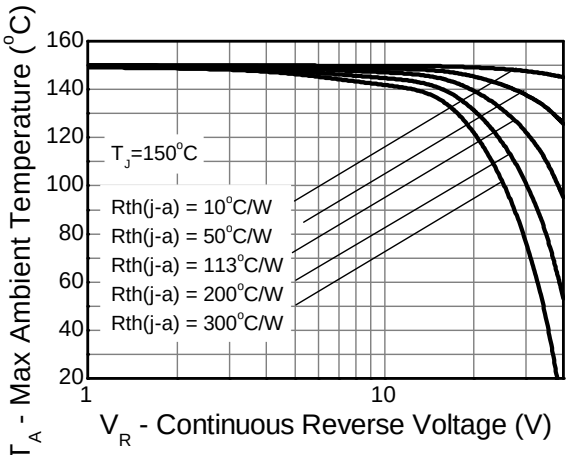

T_A v V_R

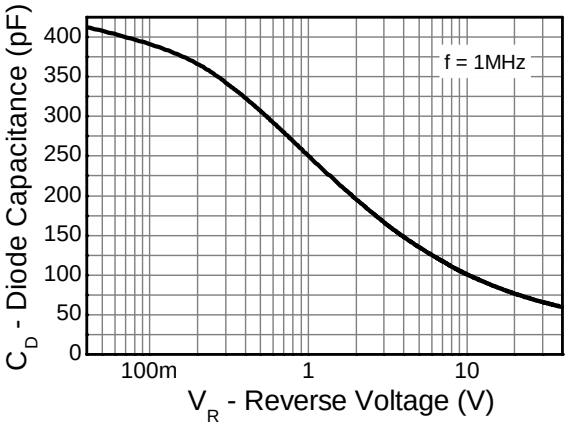

C_D v V_R

© Diodes Incorporated

Package Outline Dimensions

Please see http://www.diodes.com/package-outlines.html for the latest version.

SOT26

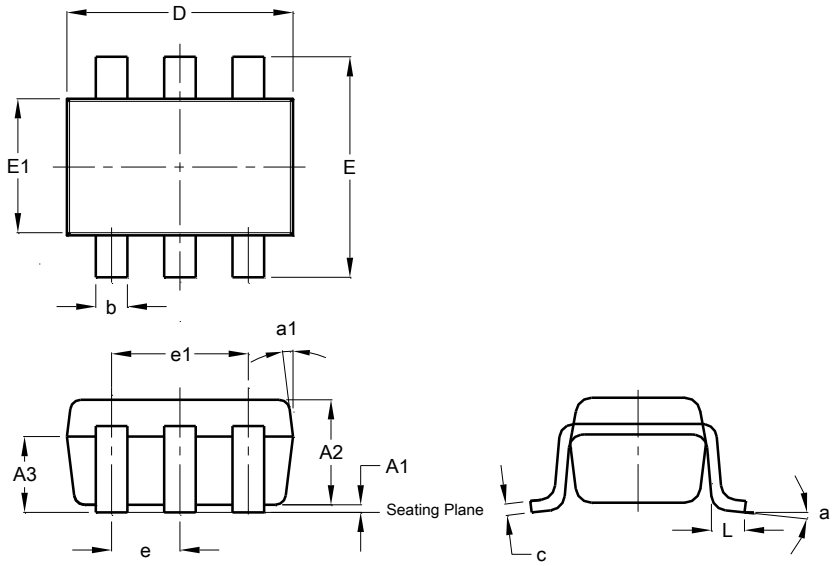

SOT26			
Dim	**Min**	**Max**	**Typ**
A1	0.013	0.10	0.05
A2	1.00	1.30	1.10
A3	0.70	0.80	0.75
b	0.35	0.50	0.38
c	0.10	0.20	0.15
D	2.90	3.10	3.00
e	-	-	0.95
e1	-	-	1.90
E	2.70	3.00	2.80
E1	1.50	1.70	1.60
L	0.35	0.55	0.40
a	-	-	8°
a1	-	-	7°
All Dimensions in mm			

Suggested Pad Layout

Please see http://www.diodes.com/package-outlines.html for the latest version.

SOT26

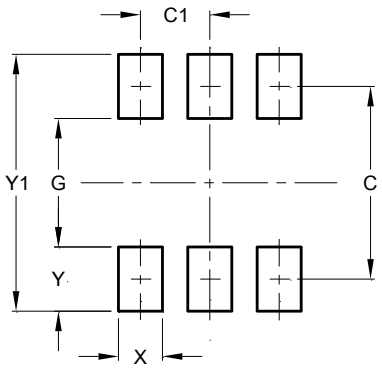

Dimensions	Value (in mm)
C	2.40
C1	0.95
G	1.60
X	0.55
Y	0.80
Y1	3.20

© Diodes Incorporated

IMPORTANT NOTICE

DIODES INCORPORATED MAKES NO WARRANTY OF ANY KIND, EXPRESS OR IMPLIED, WITH REGARDS TO THIS DOCUMENT, INCLUDING, BUT NOT LIMITED TO, THE IMPLIED WARRANTIES OF MERCHANTABILITY AND FITNESS FOR A PARTICULAR PURPOSE (AND THEIR EQUIVALENTS UNDER THE LAWS OF ANY JURISDICTION).

Diodes Incorporated and its subsidiaries reserve the right to make modifications, enhancements, improvements, corrections or other changes without further notice to this document and any product described herein. Diodes Incorporated does not assume any liability arising out of the application or use of this document or any product described herein; neither does Diodes Incorporated convey any license under its patent or trademark rights, nor the rights of others. Any Customer or user of this document or products described herein in such applications shall assume all risks of such use and will agree to hold Diodes Incorporated and all the companies whose products are represented on Diodes Incorporated website, harmless against all damages.

Diodes Incorporated does not warrant or accept any liability whatsoever in respect of any products purchased through unauthorized sales channel. Should Customers purchase or use Diodes Incorporated products for any unintended or unauthorized application, Customers shall indemnify and hold Diodes Incorporated and its representatives harmless against all claims, damages, expenses, and attorney fees arising out of, directly or indirectly, any claim of personal injury or death associated with such unintended or unauthorized application.

Products described herein may be covered by one or more United States, international or foreign patents pending. Product names and markings noted herein may also be covered by one or more United States, international or foreign trademarks.

This document is written in English but may be translated into multiple languages for reference. Only the English version of this document is the final and determinative format released by Diodes Incorporated.

LIFE SUPPORT

Diodes Incorporated products are specifically not authorized for use as critical components in life support devices or systems without the express written approval of the Chief Executive Officer of Diodes Incorporated. As used herein:

A. Life support devices or systems are devices or systems which:

1. are intended to implant into the body, or
2. support or sustain life and whose failure to perform when properly used in accordance with instructions for use provided in the labeling can be reasonably expected to result in significant injury to the user.

B. A critical component is any component in a life support device or system whose failure to perform can be reasonably expected to cause the failure of the life support device or to affect its safety or effectiveness.

Customers represent that they have all necessary expertise in the safety and regulatory ramifications of their life support devices or systems, and acknowledge and agree that they are solely responsible for all legal, regulatory and safety-related requirements concerning their products and any use of Diodes Incorporated products in such safety-critical, life support devices or systems, notwithstanding any devices- or systems-related information or support that may be provided by Diodes Incorporated. Further, Customers must fully indemnify Diodes Incorporated and its representatives against any damages arising out of the use of Diodes Incorporated products in such safety-critical, life support devices or systems.

Copyright © 2019, Diodes Incorporated

www.diodes.com