THIS DRAWING IS UNPUBLISHED. RELEASED FOR PUBLICATION 20
© COPYRIGHT 20 BY - ALL RIGHTS RESERVED.

TYPE 1
类型1
Housing with TE Logo
带TE LOGO下壳

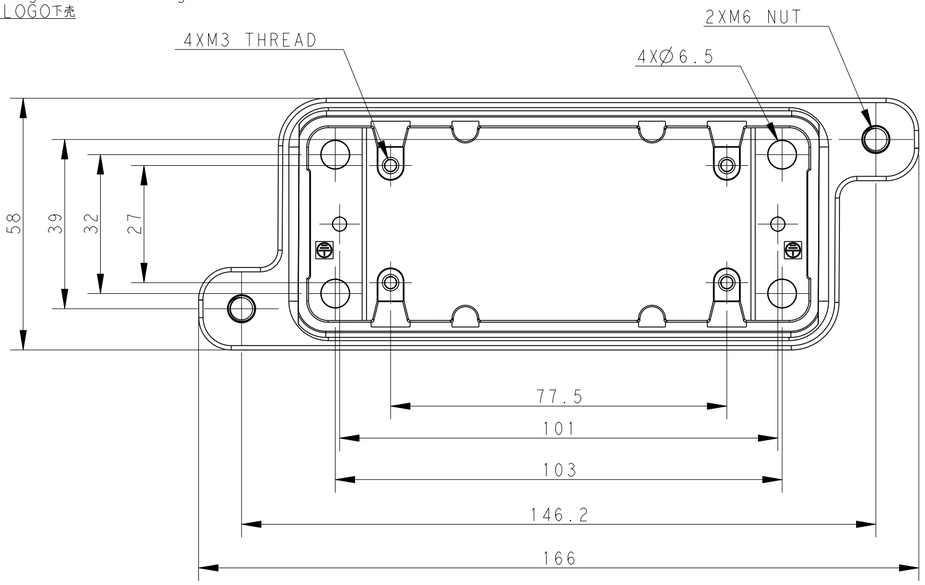

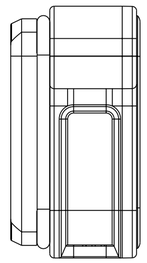

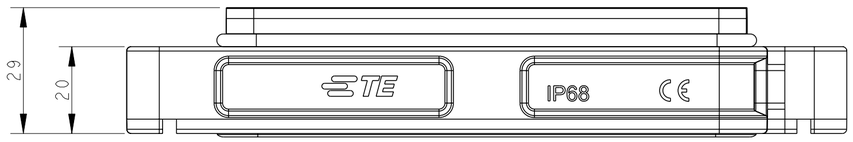

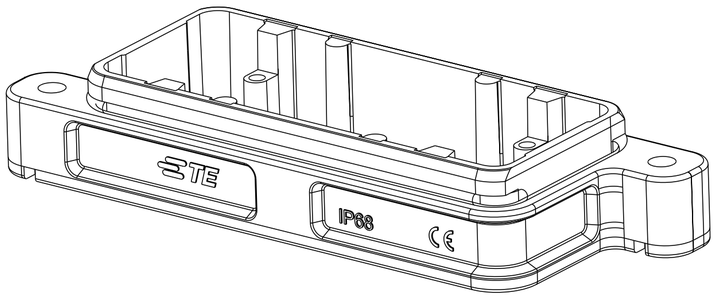

TYPE 2
类型2
Housing without Logo
不带LOGO下壳

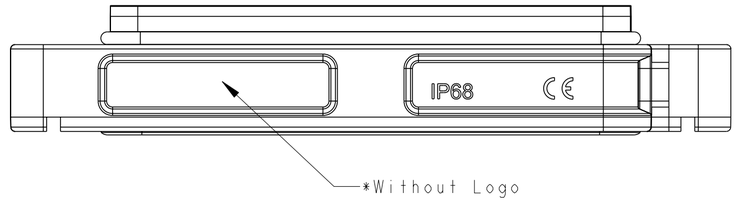

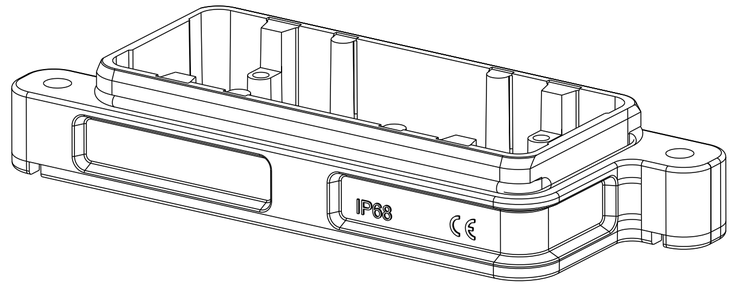

All dimension is same as TYPE 1,except those defined in this TYPE
除了在本类型中定义的尺寸外，其它尺寸同类型1

REVISIONS					
P	LTR	DESCRIPTION	DATE	DWN	APVD
	A	INITIAL RELEASE	13JUN2015	GY	CW
	A1	ECR-18-011763	01AUG2018	CD	CW
	B	ECR-20-012892	12MAY2021	BS	CW

NOTES:
1. TECHNICAL CHARACTERISTICS:
   HOUSING MATERIAL: DIE CAST ALUMINIUM ALLOY
   SURFACE TREATMENT: SEE TABLE
   DEGREE OF PROTECTION: IP68 (MATED)

注释
1.技术参数：
壳体材料： 铝合金
表面处理： 见表格
防护等级： IP68 （配合）

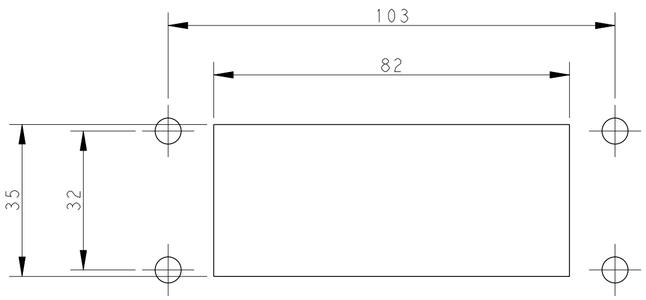

Panel Cut Out

PART NUMBER 成品料号	SURFACE TREATMENT 表面处理		DESCRIPTION 描述	TYPE 类型
T1930162000-001	POWDER COATED,DEEP GREY 表面喷涂,深灰色	H16BPR-AG	H16BPR HOUSING,DIAGONAL LOCKING,BULKHEAD MOUNTED,POWDER COATED,DEEP GREY,NO LOGO H16BPR下壳，对角锁定，开孔安装，深灰色粉末喷涂，无LOGO	TYPE 2 类型2
T1930160000-100	POWDER COATED,BLACK 表面喷涂,黑色		H16BPR HOUSING,DIAGONAL LOCKING,BULKHEAD MOUNTED,POWDER COATED,BLACK,NO LOGO H16BPR下壳，对角锁定，开孔安装黑色粉末喷涂，无LOGO	
T1930162000-000	POWDER COATED,GREY 表面喷涂,灰色		H16BPR HOUSING,DIAGONAL LOCKING,BULKHEAD MOUNTED,POWDER COATED,GREY H16BPR下壳，对角锁定，开孔安装，灰色粉末喷涂	TYPE 1 类型1
T1930161000-000	POWDER COATED,SILVER WHITE 表面喷涂,银白色		H16BPR HOUSING,DIAGONAL LOCKING,BULKHEAD MOUNTED,POWDER COATED,SILVER WHITE H16BPR下壳，对角锁定，开孔安装，银白色粉末喷涂	
T1930160000-000	POWDER COATED,BLACK 表面喷涂,黑色		H16BPR HOUSING,DIAGONAL LOCKING,BULKHEAD MOUNTED,POWDER COATED,BLACK H16BPR下壳，对角锁定，开孔安装，黑色粉末喷涂	

THIS DRAWING IS A CONTROLLED DOCUMENT.

DIMENSIONS: mm

TOLERANCES UNLESS OTHERWISE SPECIFIED:
0 PLC ±-
1 PLC ±-
2 PLC ±-
3 PLC ±-
4 PLC ±-
ANGLES ±-

MATERIAL -
FINISH -

DWN Gino.Yao 13JUN2015
CHK Chris.Wang 13JUN2015
APVD Xiang.xu 13JUN2015
PRODUCT SPEC 108-137014
APPLICATION SPEC 114-137014
WEIGHT -

TE Connectivity

NAME H16BPR-AG

SIZE	CAGE CODE	DRAWING NO	RESTRICTED TO
A2	-	C-T193016XXXXX00	-

Customer Drawing | SCALE 1:1 | SHEET 1 OF 1 | REV B

printed on 13 May 2021 09:03 (China Standard Time) from TE236667