REV.	ECN NO.	DATE	SIGN	DESCRIPTION
B	LE3-910082	2009/01/16	Vicky	Update the drawing.

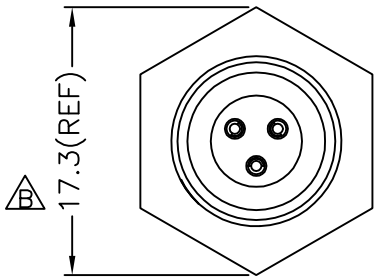

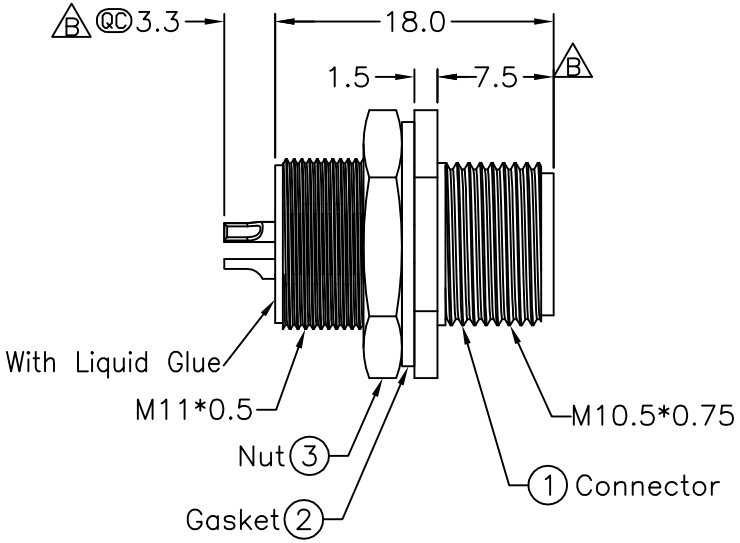

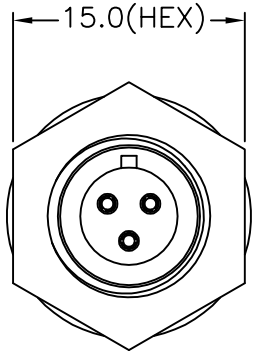

ALTW
DCC. DEPT.
CONFIDENTIAL
2009.01.20
ISSUED

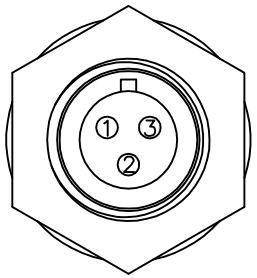

Pin Assignments
Front View

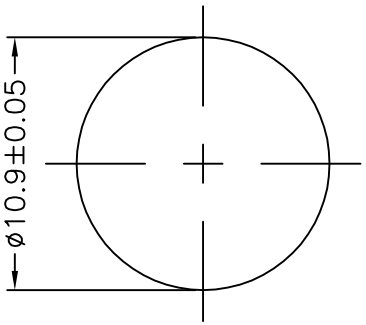

Recommended Panel Cut-Out

ALTW
CONFIDENTIAL
2009.01.16
R&D DEPT.

Notes:
* QC Important Dimension.
* Waterproof Rate:IP67.
* Connector:Black,Nylon+GF.
* Female Pin:Copper Alloy,Gold Plated.
* Gasket:Black,EPDM.
* Nut:Copper Alloy,Nickel Plated.
* Shield:Copper Alloy,Nickel Plated.
* For Panel Thickness Max:6.0mm.
B * Nut Torque:4~6 Kgf.cm

UNIT:mm	TITLE B M10.5 Conn Panel Screw 3P M Conn F Pin	Amphenol LTW 安費諾亮泰企業股份有限公司	ITEM NO 105-03PMFS-SH7001	DRAWN BY Vicky	DATE 2009/01/16
TOLERANCE .X ±0.25 .XX ±0.1 .XXX ±0.05 ANGLES ±1°	SCALE Free / SHEET 1 OF 1		DWG NO 105-03PMFS-SH7001	CHECKED BY Ivan	DATE 2009/01/16
	REV. B / SIZE A4 / QC :Inspection Item		CUSTOMER ALTW	APPROVED BY Luke	DATE 2009/01/16

THIS DOCUMENT IS SUBJECT TO CHANGE WITHOUT NOTICE. IT IS CONFIDENTIAL AND A PROPERTY OF Amphenol LTW. DISCLOSURE TO THIRD PARTY HAS TO BE AUTHORIZED BY Amphenol LTW.