THIS DRAWING IS UNPUBLISHED. RELEASED FOR PUBLICATION 2006
© COPYRIGHT 2006 BY - ALL RIGHTS RESERVED.

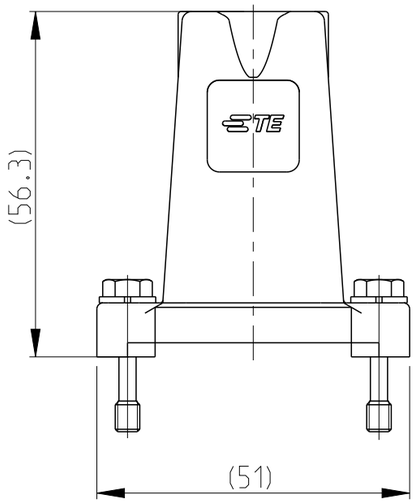

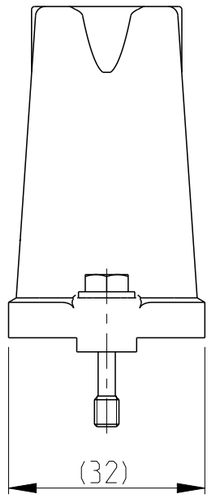

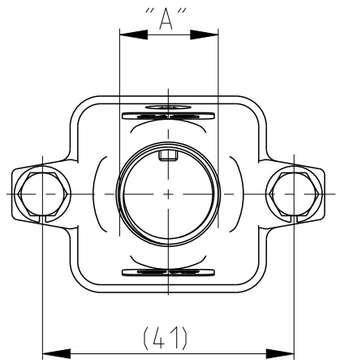

PN 0-1 AS SHOWN

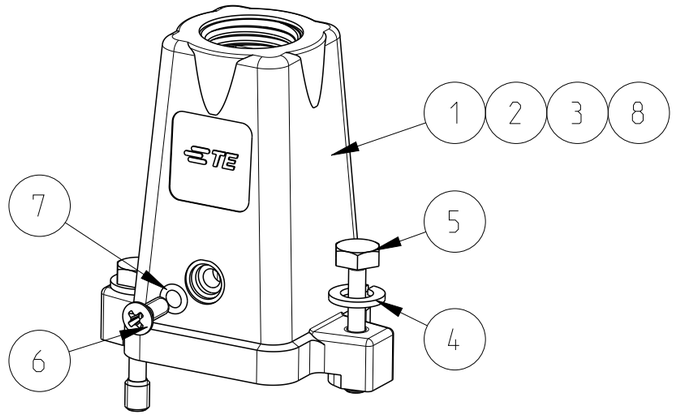

REVISIONS

P	LTR	DESCRIPTION	DATE	DWN	APVD
	A3	ECR-09-023155	22OCT2009	VG	AR
	A4	ECR-10-009092	24MAR2010	RO	BR
	B	ECR-16-001855	29FEB2016	GCM	JB
	C	ECR-16-014579	26APR2017	GCM	JB

Notes

1 SUITABLE HOUSINGS: SERIES HIP, SIZE 1
CUSTOMER DRAWING 1102603, 1102602

2 STANDARDS:
DIN EN 61984, DIN EN 60664-1

3 TOOL:
PHILLIPS SCREWDRIVER PH1
HEXAGON SCREWDRIVER 7mm

4 VARNISH ON INSIDE AREA NOT NECESSARY

5 PACKAGING:
10 SETS IN A CARTON, PRE-MOUNTED

PART NO.	ORDERING TEXT
0-1106408-4	HIP-K.3/4.ST-N
0-1106408-3	HIP-K.3/4.STO.1.M20.G
0-1106408-2	HIP-K.3/4.STO.1.M16.G
0-1106408-1	HIP.3/4.STO.1.M16.G

PARTS LIST (PER ONE UNIT)

PN/QTY 0-4	0-3	0-2	0-1	DESCRIPTION	"A" Dim.	MATERIAL	COLOR/SURFACE	NOTE	ITEM
1	-	-	-	CONNECTOR HOUSING	-	ALU ALLOY	BLACK	SERIES HIP-K,SIZE 1, W/O LOGO AND THREAD	8
1	1	1	1	O - RING	-	NBR	BLACK	3.0x1.0	7
1	1	1	1	SCREW COUNTERSUNK RAISED HEAD	-	STAINL. STEEL	V2A	M3x8 PH1 DIN EN ISO 7047	6
2	2	2	2	SCREW, HEXAGON BOLT	-	STAINL. STEEL	BLANK	M4X22 DIN EN ISO 7964, REDUCED SHUNK	5
2	2	2	2	WASHER, PLAIN	-	STAINL. STEEL	BLANK	A4, DIN EN ISO 7989. 200HV	4
-	1	-	-	CONNECTOR HOUSING	M20	ALU ALLOY	BLACK	SERIES HIP-K	3
-	-	1	-	CONNECTOR HOUSING	M16	ALU ALLOY	BLACK	SERIES HIP-K	2
-	-	-	1	CONNECTOR HOUSING	M16	ALU ALLOY	GREY	SERIES HIP	1

THIS DRAWING IS A CONTROLLED DOCUMENT.

DIMENSIONS: mm

TOLERANCES UNLESS OTHERWISE SPECIFIED:
0 PLC ±-
1 PLC ±-
2 PLC ±-
3 PLC ±-
4 PLC ±-
ANGLES ±1°

MATERIAL -
FINISH -

DWN V.GLUMM 13AUG2009
CHK H.Braun 13AUG2009
APVD T.Schnurpfeil 13AUG2009
PRODUCT SPEC -
APPLICATION SPEC -
WEIGHT -

TE Connectivity

NAME CONNECTOR HOUSING ASS'Y, TOP ENTRY
SERIES HIP, SIZE 1, M16 / M20
METRIC

SIZE	CAGE CODE	DRAWING NO	RESTRICTED TO
A3	00779	C-1106408	-

CUSTOMER DRAWING | SCALE 1:1 | SHEET 1 OF 1 | REV C