THIS DRAWING IS UNPUBLISHED. RELEASED FOR PUBLICATION 20
© COPYRIGHT 20 BY - ALL RIGHTS RESERVED.

REVISIONS

P	LTR	DESCRIPTION	DATE	DWN	APVD
	A	INITIAL RELEASE	04JUL2019	F.MA	I.Y
	B	ECR-20-011066	10OCT2020	K.SI	I.Y
	C	ECR-21-005198	17JUN2021	K.SI	I.Y
	C1	ECR-22-139970	22MAY2022	C.C	Z.Z

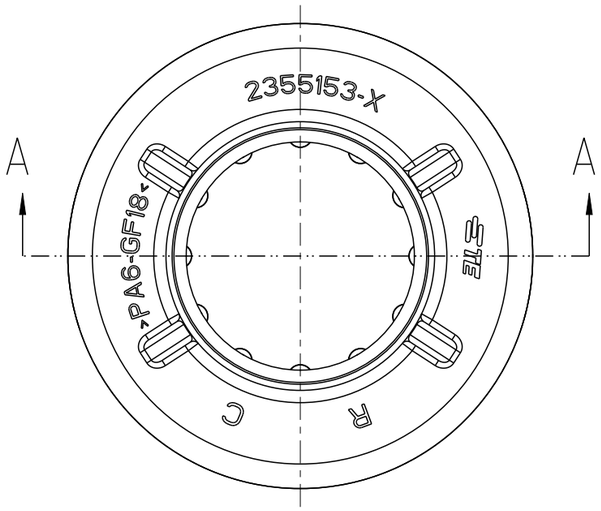

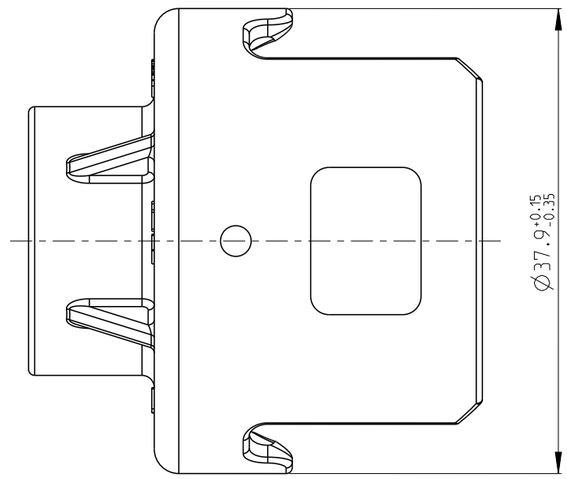

1. SUPPLIED FORM: LOOSE PIECE PACKED INTO CARTON

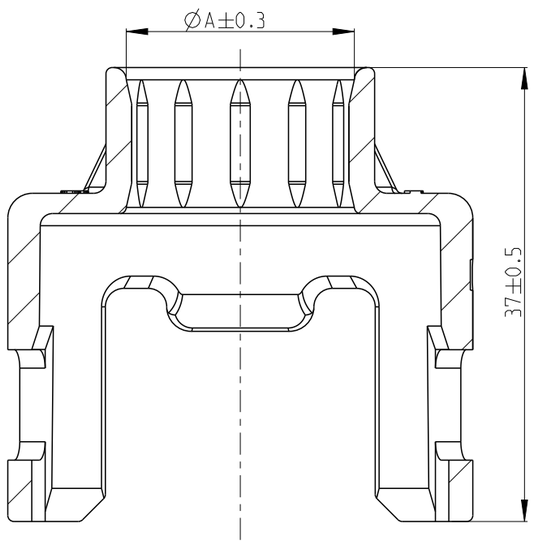

SECTION A-A

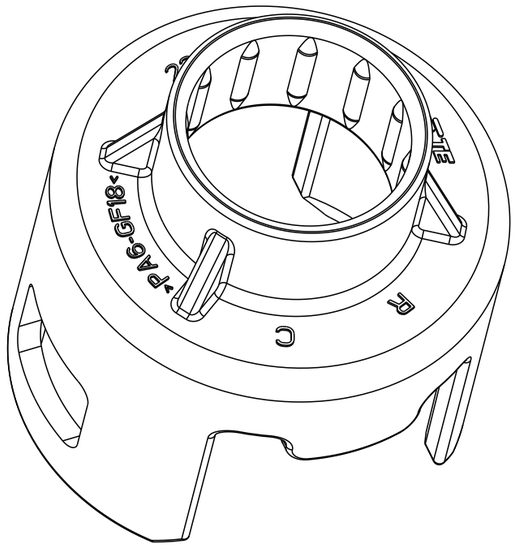

C1

P/N	DESCRIPTION	FOR WIRE DIAMETER	ØA	MATERIAL	COLOUR
2355153-6	PROTECTIVE COVER 95mmSQ(ISO H+S)	19.9+/-0.4	20.4	PA6-GF18	ORANGE
2355153-5	PROTECTIVE COVER 95mmSQ(COROPLAST)	20.9+0/-0.8	21.0		ORANGE
2355153-4	PROTECTIVE COVER 50mmSQ(ISO H+S)	14.9+0/-0.3	15.6		ORANGE
2355153-3	PROTECTIVE COVER 70mmSQ(ISO H+S)	17.0+/-0.3	17.7		ORANGE
2355153-2	PROTECTIVE COVER 50mmSQ(COROPLAST)	15.8+0/-0.6	16.2		ORANGE
2355153-1	PROTECTIVE COVER 70mmSQ(COROPLAST)	18.2+0/-0.8	18.6		ORANGE

THIS DRAWING IS A CONTROLLED DOCUMENT.

DIMENSIONS: mm

TOLERANCES UNLESS OTHERWISE SPECIFIED:
0 PLC ±
1 PLC ±0.5
2 PLC ±0.5
3 PLC ±0.5
4 PLC ±0.5
ANGLES ±

MATERIAL: SEE TABLE

FINISH

DWN F.MA 27JUN2019
CHK E.JIANG 04JUL2019
APVD I.YIN 04JUL2019

PRODUCT SPEC: 108-160140

APPLICATION SPEC: 114-160083

WEIGHT

CUSTOMER DRAWING

TE Connectivity

NAME: IPT HD COVER

SIZE	CAGE CODE	DRAWING NO	RESTRICTED TO
A3	00779	C-2355153	

SCALE 2:1 SHEET 1 OF 1 REV C1