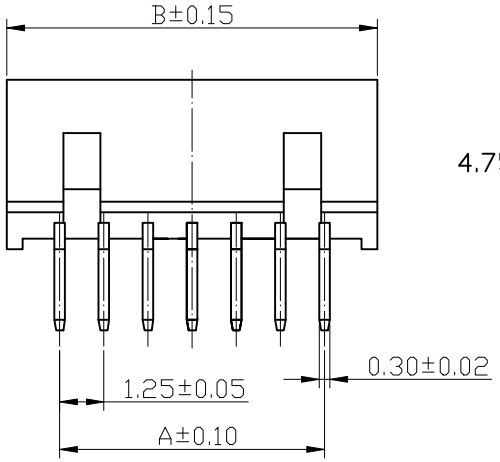

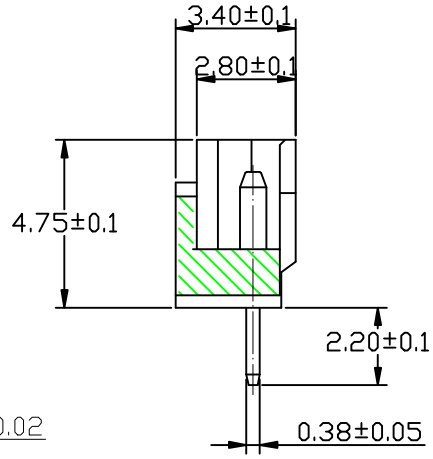

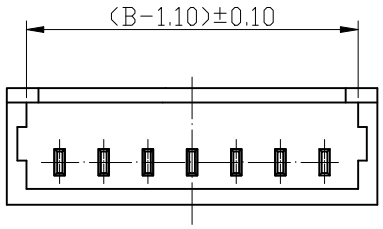

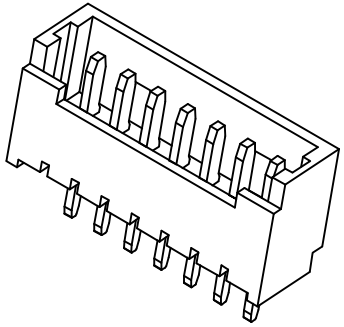

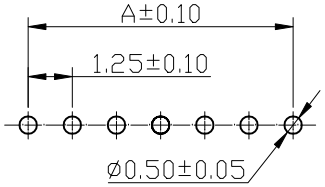

SUGGESTED PCB LAYOUT
(COMPONENT SIDE)

SPECIFICATION

1 Material:
Insulator：旭化成172 (UL94V-0)
Contacts: Phosphor Bronze, Tin-plated
2 Contact resistance：≤20mΩ
3 Insulation resistance：≥100MΩ
4 Rated voltage：125 V AC DC
5 Rated current：1.0 A AC DC
6 Withstand Voltage：250V AC/minute
7 Temperature Range: -25℃～ +85℃
8 Six deleterious substance content meet the environmental protection requirement

型号-线数 TYPE-Poles	尺寸Dimensions(mm) A	B	型号-线数 TYPE-Poles	尺寸Dimensions(mm) A	B
A1251A-2P	1.25	4.55	A1251A-10P	11.25	14.55
A1251A-3P	2.50	5.80	A1251A-11P	12.50	15.80
A1251A-4P	3.75	7.05	A1251A-12P	13.75	17.05
A1251A-5P	5.00	8.30	A1251A-13P	15.00	18.30
A1251A-6P	6.25	9.55	A1251A-14P	16.25	19.55
A1251A-7P	7.50	10.80	A1251A-15P	17.50	20.80
A1251A-8P	8.75	12.05	A1251A-16P	18.75	22.05
A1251A-9P	10.00	13.30			

REV	DESCRIPTION	REV. DRAWN	DATE
A	NEW RELEASE		

TOLERANCE	
.	±0.25
*.**	±0.15
*.***	±0.05
SCALE:	
UNIT:	mm
VIEW:	
DRAW	
CHECK	
APPRO	

1.25直针

TITLE: 1.25mm PITCH 180° WAFER

PART NO:

浙江博穆精密电子有限公司