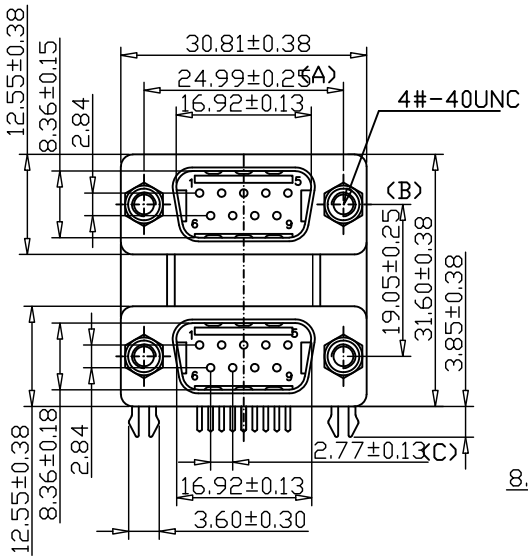

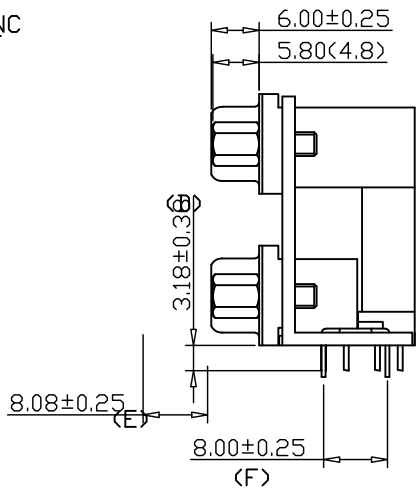

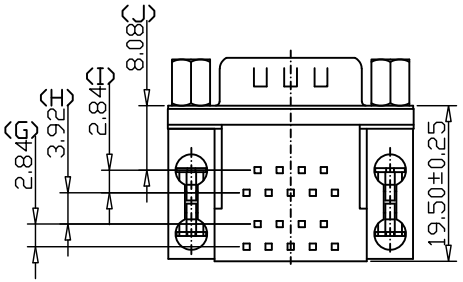

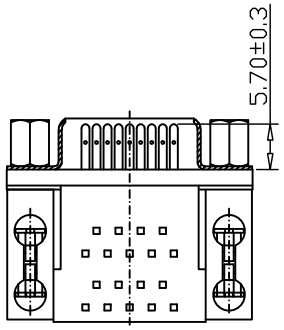

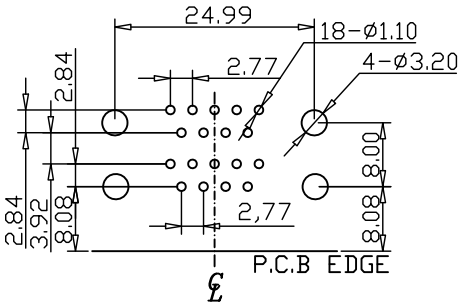

RECOMMENDED P.C.B LAYOUT

INSPECTION DIMENSION:(A)~(J)

SPECIFICATIONS

ELECTRICAL CHARACERISTICS:

Contact Current Rating: 1.5 Amperes.
Dielectric Withstanding Voltage: AC 1000/60sec.r.m.s.
Insulation Resistance:1000 Megohms Minimum.at DC 500V.
Contact Resistance:25 Milliohms Maximum.
Operating Temperature:-20°C to+85°C.

MECHANICAL CHARACTERISTICS:

Contact Insertion Force:341 g.Maximum.
Contact Separation Force:21 g.Minimum.

MATERIALS:

Contacts:Brass C2680
Insulator: PBT UL 94V-0
Shell:SPCC

FINISHES:

Contact:Gold Flash
Shell:Tin Or Nickel Plated.

深圳市华宇创精密电子有限公司

TOLERANCE: X.X ±0.30 X.XX ±0.25 X.XXX ±0.15 X.° ±2° X.X° ±0.5°	DRAWED BY : 陈一鸣	DATE : 2014-02-23	PART NAME: DR9公对DR9公 间距19.05	
	CHECKED BY: 马跃	DATE : 2014-02-23	PART NO.	HYCW31-VGA18A-195B
			MOLD NO.	
UNIT: mm [inch]	APPROVED BY: 邱国夷	DATE : 2014-02-23	DRAW NO:	HYC-VGA16072514
SCALE:1:1 SIZE: A4			SHEET NO.	1 OF 1