REV.	ECN NO.	DESCRIPTION	DATE	DESIGN

Pb Process Capable

RoHS Compliant 2011/65/EU

Compliant Halogen Free

技术要求:

1.塑件材料:PA66(UL-94V-0)

2.接触件:黄铜镀锡

3.接触电阻:≤20mΩ

4.绝缘电阻:≥1000MΩ

5.额定电压:250V AC DC

6.额定电流:3.0A AC DC

7.耐压:能承受1000V AC/Minute

8.工作温度:-25°~+85°

9.可焊性试验:浸锡面积≥95%温度$235^{+5°}_{-0°}$,时间2.5±0.5秒

10.铅和镉等六大有害物质含量要符合环保要求.

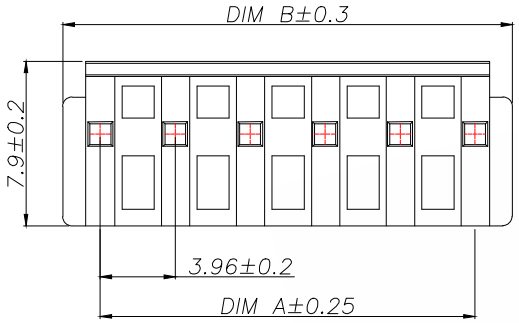

Part No	Pin	A	B
AVH-B2P-11	2	3.96	7.92
AVH-B3P-11	3	7.92	11.88
AVH-B4P-11	4	11.88	15.84
AVH-B5P-11	5	15.84	19.80
AVH-B6P-11	6	19.80	23.76
AVH-B7P-11	7	23.76	27.72
AVH-B8P-11	8	27.72	31.68
AVH-B9P-11	9	31.68	35.64
AVH-B10P-11	10	35.64	39.60
.....	...	...	...
AVH-B20P-11	20	(20-1)x3.96	(20+1)x3.96

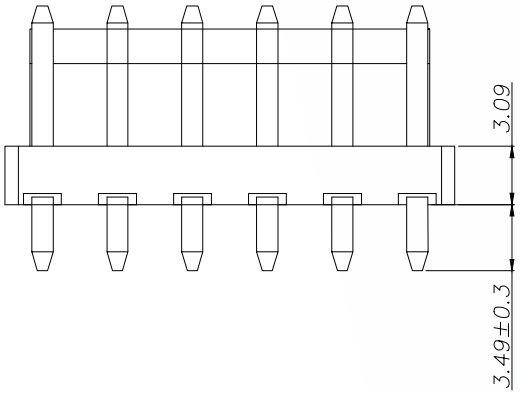

SUGGESTED PCB LAYOUT
(COMPONENT SIDE)

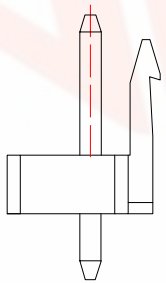

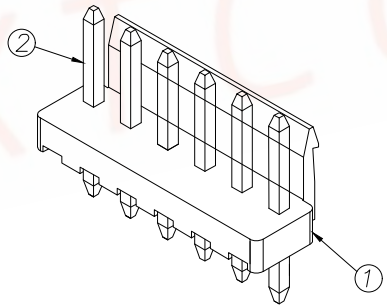

序号	名称	材料	数量	备注
2	端子 Contact	黄铜	N*1	电镀(锡):整个表面镀底镍30u"MIN,再镀锡80u"MIN
1	基座 Wafer	LCP (UL94V-0)	1	米色

TOLERANCE			
X.X ±0.20	X.° ±10°		
.XX ±0.10	.X° ± 8°		
.XXX ±0.05	.XX° ± 5°		
UNITS	mm		
MATERILA	— — —		
FINISH	— — —		

深圳聚兴泰电子科技有限公司
Shenzhen Juxingtai Electronic Technology Co., Ltd

PART NO. AVH-BXP-11	TITLE: VH3.96MM 直针 带扣
DESIGN: Ethan	MANUFACTURE DWG
CHED: Olvia	SCALE N:A / SHEET 1/1
APPD: Ava	