REV	DESCRIPTION	DESIGN	APPROVAL	DATE
A0	NEW VERSION	Yuan	Jerry	2024/08/05

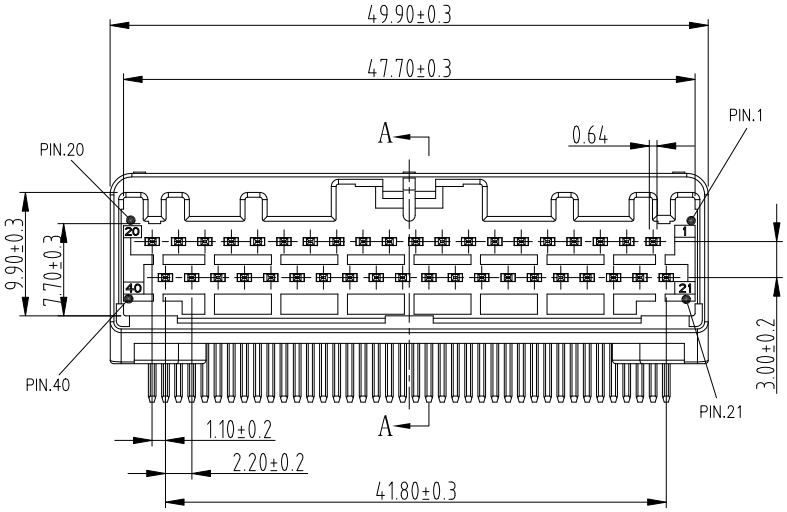

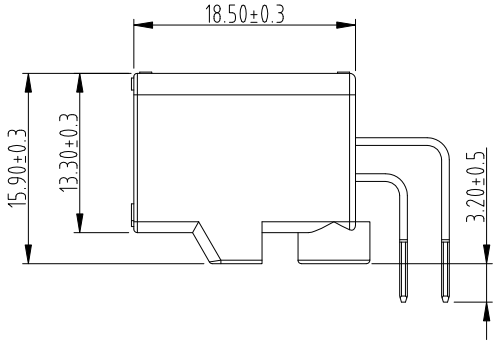

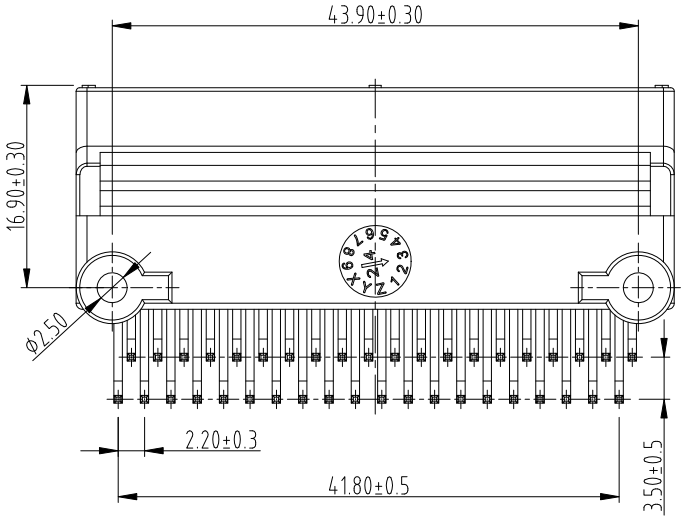

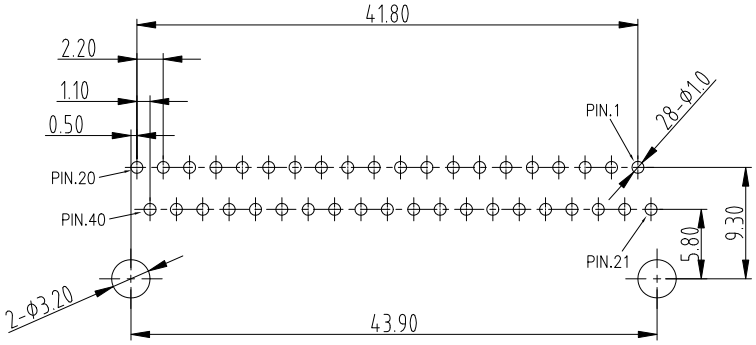

PCB LAYOUT

Specifications:

1.Contact Resistance/接触电阻:≤20mΩ
2.Insulation Resistance/绝缘电阻:≥100MΩ
3.Rated Voltage/额定电压:100V Max AC/DC
4.Rated Current/额定电流:3.0A Max AC/DC
5.Withstand Voltage/耐压: 1000v Ac/minute
6.Temperature Range/工作温度范围:-40℃~+85℃
7.Housing/外壳:PPS UL94V-0 Grey
8.Contacts/端子:Brass Sn-Plated
9.RoHS Compliance/产品符合RoHS;

X.± 0.35	X.°± 5°
.X± 0.20	.X°± 3°
.XX± 0.15	.XX°± /
.XXX± 0.10	.XXX°± /
UNITS:	mm

The information in this document is property of JiDC company and should not be copied or reproduced in any other way, without written permission.

Guangdong JiDe Precision Electronics Co., Ltd
广东济德精密电子有限公司

TITLE: 2.20mm Pitch 40PIN Male 90°DIP

PART NO. 991-401-5128

DWG NO: C-991-401-5128

APPD:

CHKD:

DRAW:

SCALE	SHEET	REV.
N/A	1/1	A0