REV	DESCRIPTION	DESIGN	APPROVAL	DATE
A0	NEW VERSION	Toy	Jerry	2024/08/21

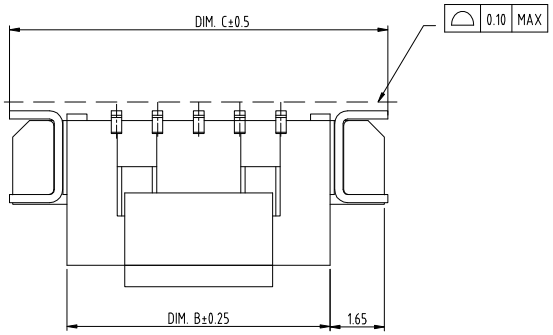

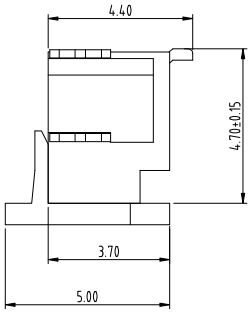

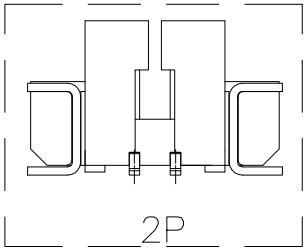

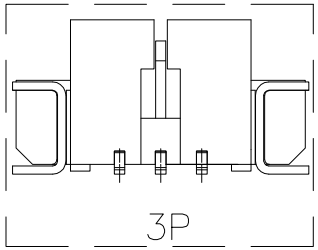

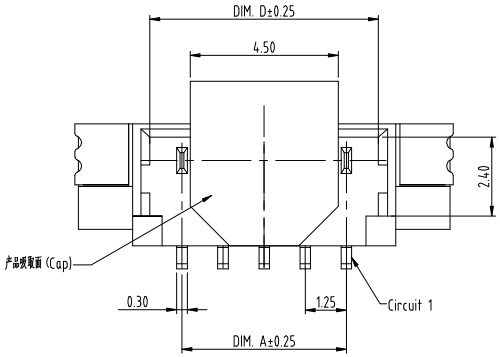

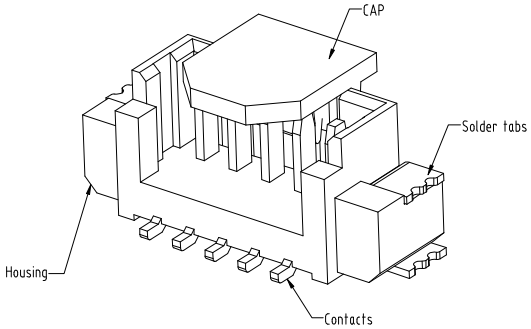

Main Spec Specifications/主要技术参数

1. Material/材质:
   - Housing/塑胶：LCP，UL94 V-0; Natural/本色；
   - CAP/盖子：LCP，UL94 V-0; Natural/本色；
   - Pin/针脚：Phosphor bronze，Sn-Plated/磷青铜，镀锡；
   - Tab/焊片：Brass，Sn-Plated/黄铜，镀锡；
2. Rated Current/额定电流：1.0A AC/DC;
3. Rated Voltage/额定电压：125V AC/DC;
4. Contact Resistance/接触电阻：≤20mΩ；
5. Insulation Resistance/绝缘阻抗：≥100MΩ；
6. Withstand Voltage/耐电压：500V AC/minute;
7. Temperature Range/工作温度：-25℃~+105℃
8. Poles/线数：02 to 16 ；
9. Order information/编码原则：991-XX1-7129
   - Poles/线数

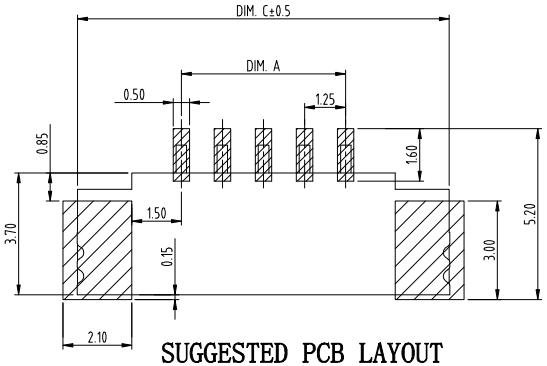

SUGGESTED PCB LAYOUT

Circuit	P/N	DIM(mm)			
		A	B	C	D
02	991-021-7129	1.25	4.25	7.75	3.20
03	991-031-7129	2.50	5.50	9.00	4.45
04	991-041-7129	3.75	6.75	10.25	5.70
05	991-051-7129	5.00	8.00	11.50	6.95
06	991-061-7129	6.25	9.25	12.75	8.20
07	991-071-7129	7.50	10.50	14.00	9.45
08	991-081-7129	8.75	11.75	15.25	10.70
09	991-091-7129	10.00	13.00	16.50	11.95
10	991-101-7129	11.25	14.25	17.75	13.20
11	991-111-7129	12.50	15.50	19.00	14.45
12	991-121-7129	13.75	16.75	20.25	15.70
13	991-131-7129	15.00	18.00	21.50	16.95
14	991-141-7129	16.25	19.25	22.75	18.20
15	991-151-7129	17.50	20.50	24.00	19.45
16	991-161-7129	18.75	21.75	25.25	20.70

X.± 0.35	X.°± 5°
.X± 0.20	.X°± 3°
.XX± 0.15	.XX°± /
.XXX± 0.10	.XXX°± /
UNITS:	mm

The information in this document is property of JiDC company and should not be copied or reproduced in any other way, without written permission.

Guangdong JiDe Precision Electronics Co., Ltd
广东济德精密电子有限公司

TITLE: 1.25mmPITCH 180°WAFER SMT TYPE	PART NO. 991-XX1-7129
APPD:	DWG NO: C-991-XX1-7129
CHKD:	
DRAW:	

SCALE	SHEET	REV.
N/A	1/1	A0