REV	DESCRIPTION	DESIGN	APPROVAL	DATE
A0	NEW VERSION	Toy	Jerry	2024/08/21

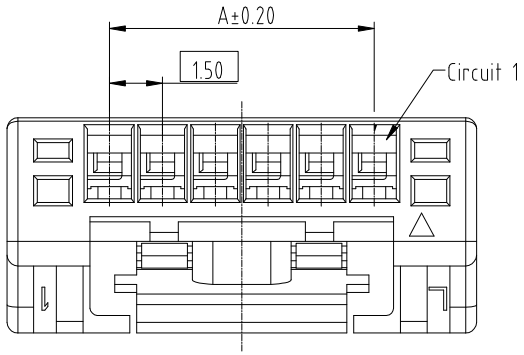

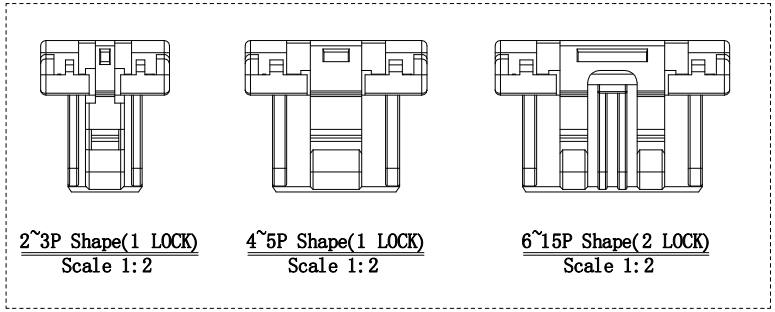

PIN	P/N	DIM(mm)			PIN	P/N	DIM(mm)		
		A	B	C			A	B	C
02	951-0217-120	1.50	7.30	4.20	09	951-0917-120	12.00	17.80	14.70
03	951-0317-120	3.00	8.80	5.70	10	951-1017-120	13.50	19.30	16.20
04	951-0417-120	4.50	10.30	7.20	11	951-1117-120	15.00	20.80	17.70
05	951-0517-120	6.00	11.80	8.70	12	951-1217-120	16.50	22.30	19.20
06	951-0617-120	7.50	13.30	10.20	13	951-1317-120	18.00	23.80	20.70
07	951-0717-120	9.00	14.80	11.70	14	961-1417-120	19.50	25.30	22.20
08	951-0817-120	10.50	16.30	13.20	15	951-1517-120	21.00	26.80	23.70

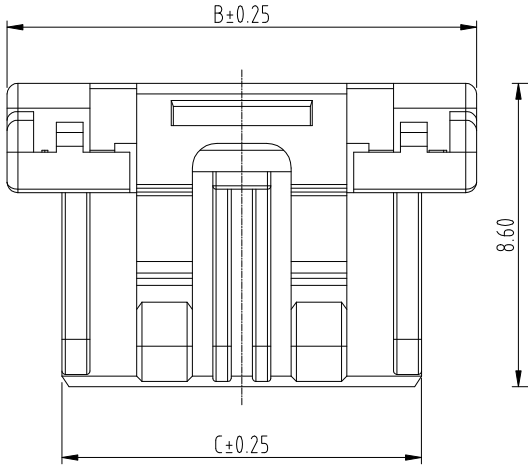

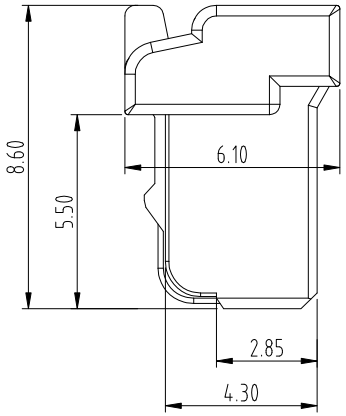

2~6P

B1 Add side view

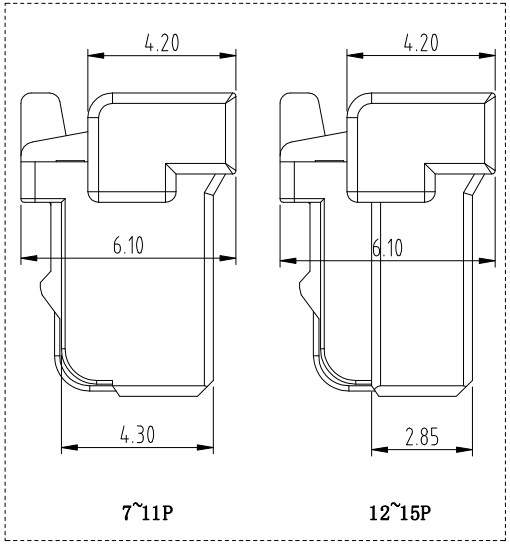

7~11P 12~15P

Main Spec Specifications/主要技术参数

1. Material/材质:
   Housing/塑胶：PBT，UL94 V-0; Natural/本色;
2. Rated Current/额定电流：2.0A AC/DC;
3. Rated Voltage/额定电压：100V AC/DC;
4. Contact Resistance/接触电阻：≤20mΩ；
5. Insulation Resistance/绝缘阻抗：≥500MΩ；
6. Withstand Voltage/耐电压：500V AC/minute;
7. Temperature Range/工作温度：-40℃~+125℃
8. Order information/编码原则：951-XX17-120

PIN:02、03、04.....

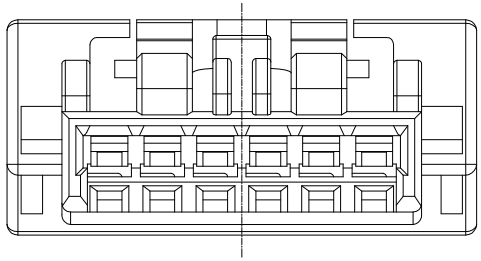

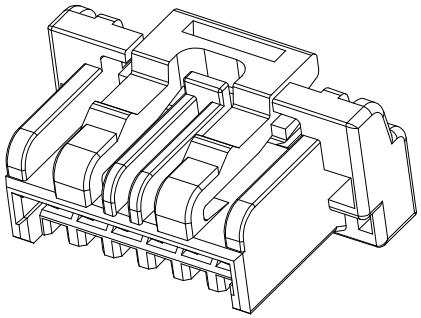

X.± 0.35	X.°± 5°
.X± 0.20	.X°± 3°
.XX± 0.15	.XX°± /
.XXX± 0.10	.XXX°± /
UNITS:	mm

The information in this document is property of JiDC company and should not be copied or reproduced in any other way, without written permission.

Guangdong JiDe Precision Electronics Co., Ltd
广东济德精密电子有限公司

TITLE: 1.50mm PITCH Housing	PART NO. 951-XX17-120
APPD:	DWG NO: C-951-XX17-120
CHKD:	
DRAW:	

SCALE	SHEET	REV.
N/A	1/1	A0