© – TE Connectivity. All Rights Reserved.

REVISIONS					
P	LTR	DESCRIPTION	DATE	DWN	APVD
	E	REVISED PER ECN-24-294651	21NOV2024	T.W	H.T

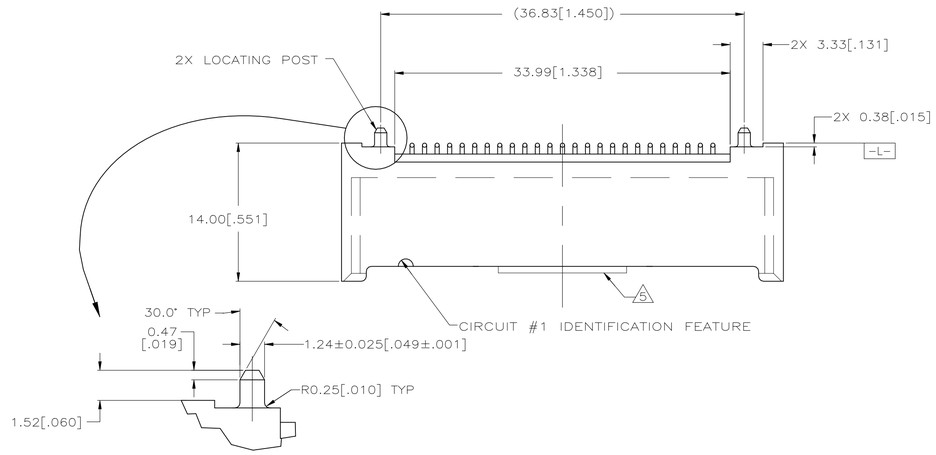

SCALE 8:1

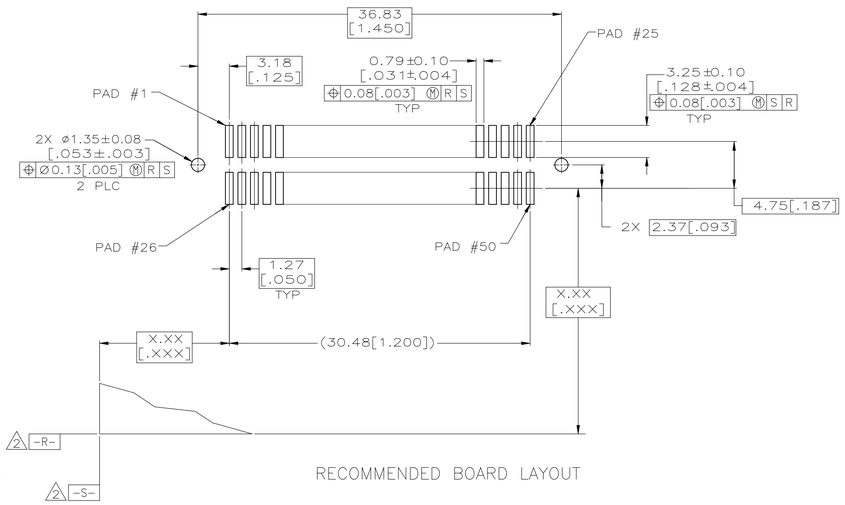

RECOMMENDED BOARD LAYOUT

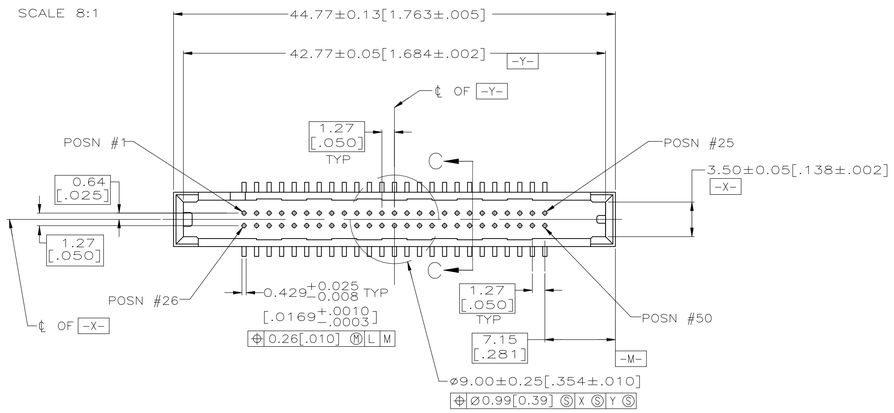

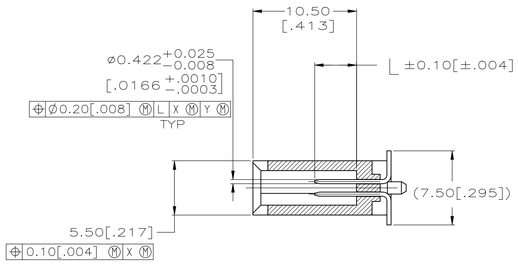

SECTION C–C

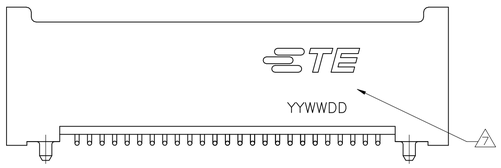

1. 0.00076[.000030] MIN GOLD IN CONTACT AREA, 0.00381[.000150] MIN TIN–LEAD ON SOLDER TAILS ALL OVER 0.00127[.000050] MIN NICKEL
2. DATUMS AND BASIC DIMENSIONS ESTABLISHED BY CUSTOMER.
3. PARTS TO BE PACKAGED IN TUBES.
4. PARTS TO BE PACKAGED IN TAPE AND REEL.
5. KAPTON VACUUM PICK–UP BUTTON FOR –2 & –4 ONLY (SHOWN IN PHANATOM TO SHOW CONNECTOR DETAIL).
6. 0.00076[.000030] MIN GOLD IN CONTACT AREA, 0.00381[.000150] MIN TIN ON SOLDER TAILS ALL OVER 0.00127[.000050] MIN NICKEL
7. DATE CODE : YYWWDD (YY:YEAR, WW:WEEK, DD:DAY)

CONTACT FINISH	PACKAGING	DESCRIPTION	.197	.167	.138	ASSEMBLY PART NUMBER
			"L" PIN LGTH & CAVITY LOCATION			
6	4	AS SHOWN	1,13,38, 50	ALL OTHER PINS	25,26	146839–4
6	3					146839–3
1	4					146839–2
1	3					146839–1

THIS DRAWING IS A CONTROLLED DOCUMENT.

DIMENSIONS: INCHES

TOLERANCES UNLESS OTHERWISE SPECIFIED:
0 PLC ± –
1 PLC ± –
2 PLC ± 0.13[.005]
3 PLC ± –
4 PLC ± –
ANGLES ± 2°

MATERIAL: HOUSING: LCP, BLACK

FINISH: SEE TABLE

DWN J.ROOT 27JUN96
CHK V.RUMINSKI 07MAR07
APVD –
PRODUCT SPEC –
APPLICATION SPEC –
WEIGHT –

TE Connectivity

NAME: PIN HEADER ASSEMBLY, VERTICAL, 50 POSN, SURFACE MOUNT, –

SIZE A1 | CAGE CODE 00779 | DRAWING NO C-146839 | RESTRICTED TO –

CUSTOMER DRAWING | SCALE 4:1 | SHEET 1 OF 1 | REV E

4805 (1/15)