THIS DRAWING IS UNPUBLISHED. RELEASED FOR PUBLICATION AUGUST ,2006.
© COPYRIGHT 2006 By – ALL RIGHTS RESERVED.

REVISIONS

P	LTR	DESCRIPTION	DATE	DWN	APVD
	A1	ECR–18–012908	15AUG2018	RZ	RS

NOTES:

1. PACK IN ACCORDANCE WITH TE SPEC 107–3275
2. Au PLATING: 50u"
3. Passivation
4. ALL DIMENSIONS ARE NOMINAL FOR REFERENCE ONLY UNLESS OTHERWISE STATED

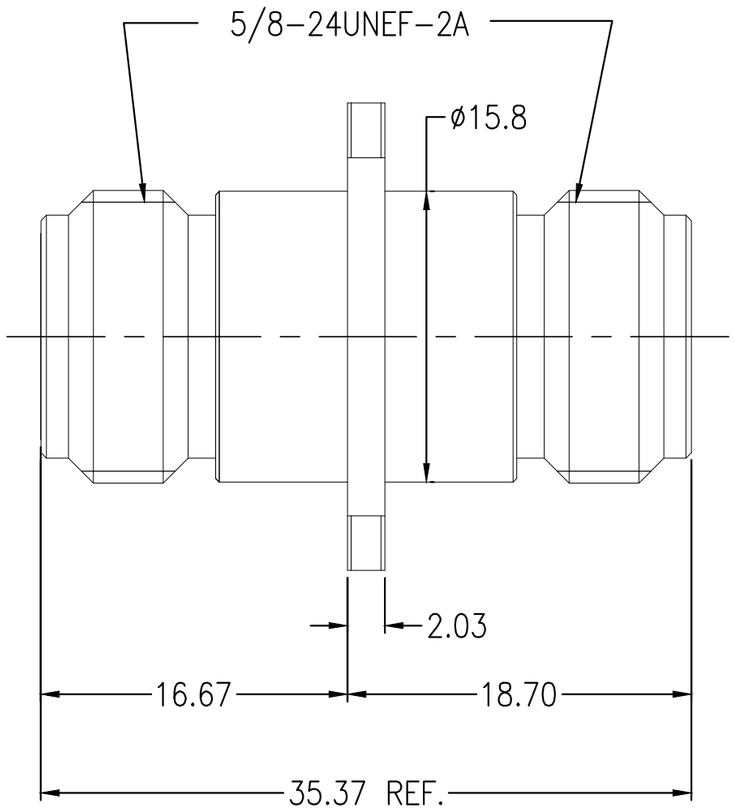

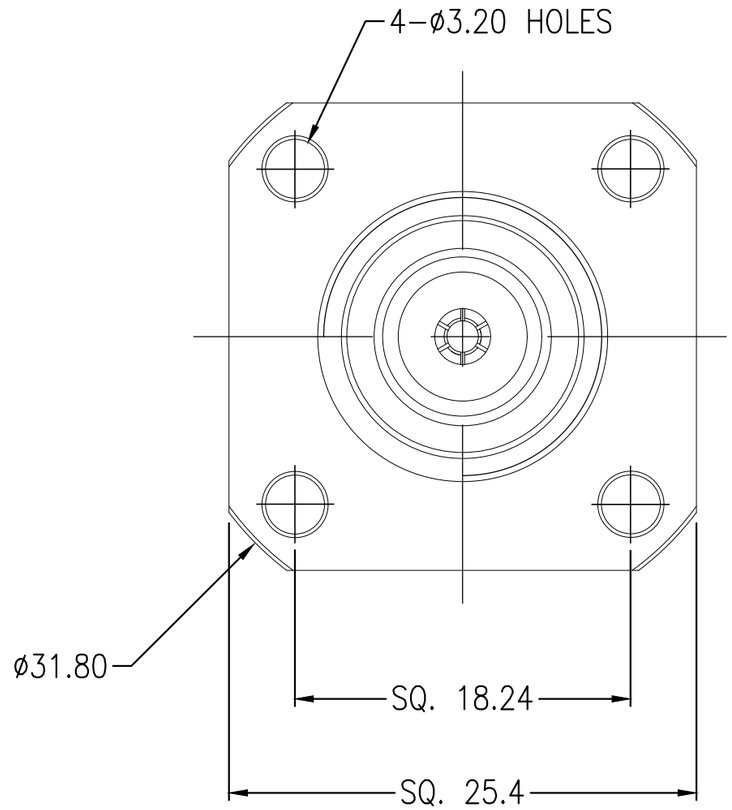

ELECTRICAL	MECHANICAL	ENVIRONMENTAL
Frequency Range (GHz) DC to 18GHz	Recommended Coupling Torque N/A	Temperature Rating –40°C TO +85°C
Voltage Rating (Peak) @ Sea Level 500 V RMS	Mating cycles 500 cycles	
Insulation Resistance (MIN.) 5000 M ohms	Center contact retention force 6 lbs MIN	
Contact Resistance (Milliohms MAX) Center Contact 1.0, Outer Contact 0.4	VSWR: 1.2 Max @ DC–– 18 GHz	
Dielectric Withstand Voltage: 1000 V RMS Max	RF leakage: N/A	
Insertion Loss : 0.1*√F(GHz) dB	3rd Intermodulation: N/A	

QUANTITY PER ASSY			ITEM	MATERIAL	DESCRIPTION
			2	PVC (BLACK)	DUST CAP
			1	PEI	INSULATION
			1	BECU (2)	CENTER CONTACT
			1	STEEL (3)	BODY
			–1	MATERIAL	DESCRIPTION
			(1)		

PARTS LIST

THIS DRAWING IS A CONTROLLED DOCUMENT.

DIMENSIONS: mm

TOLERANCES UNLESS OTHERWISE SPECIFIED:

0 PLC	± –
1 PLC	± 0.2
2 PLC	± 0.1
3 PLC	± –
4 PLC	± –
ANGLES	± –

MATERIAL: SEE TABLE

FINISH: –

DWN	ED	13JUN 2018
CHK	BW	13JUN 2018
APVD	RS	13JUN 2018
PRODUCT SPEC	—	
APPLICATION SPEC	—	
WEIGHT	0.000000	

TE Connectivity

NAME: ADAPTER
N Female to N Female
4 Hole Flange–Mounting Hole A05

SIZE	CAGE CODE	DRAWING NO	RESTRICTED TO
A3	00779	C–2081563	—

CUSTOMER DRAWING | SCALE 3:1 | SHEET 1 OF 1 | REV A1