samtec

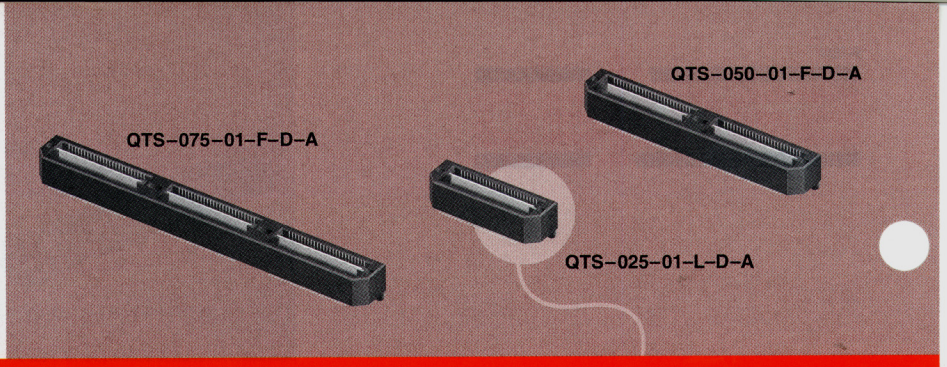

0,635mm HI-SPEED HEADER QTS SERIES

SPECIFICATIONS

For complete specifications see www.samtec.com?QTS

Insulator Material:
Liquid Crystal Polymer
Terminal Material:
Phosphor Bronze
Current Rating:
Contacts: 1.6A @ 80°C
Ground Plane: 7.9A @ 80°C
Operating Temp:
-65°C to +125°C
Plating:
Au over 50µ" (1,27µm) Ni
Voltage Rating:
285 VAC mated with QSS

FILE NO. E111594

Note: Some lengths, styles and options are non-standard, non-returnable.

Mates with:
QSS

QSTRIP® up to 2.00 GHz

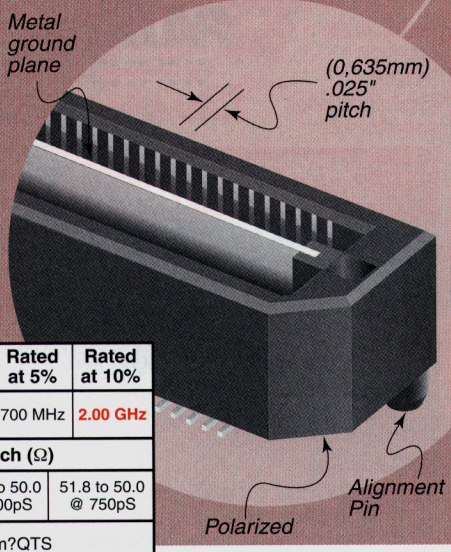

STACK HEIGHTS

LEAD STYLE	MATED HEIGHT WITH QSS
–01	(5,00) .198
–02	(8,00) .316
–03	(11,00) .434
–04	(16,00) .630

Processing conditions will affect mated height.

Configuration	Near End Crosstalk		Prop. Delay	Rated at 5%	Rated at 10%
5mm Stack Height	3.6% @ 500 pS	~8% @ 175 pS	40.0pS	700 MHz	2.00 GHz
	Impedance Mismatch (Ω)				
	56.4 to 50.0 @ 100pS	53.7 to 50.0 @ 250pS	52.4 to 50.0 @ 500pS	51.8 to 50.0 @ 750pS	

For complete Test Report logon to www.samtec.com?QTS

APPLICATION SPECIFIC OPTION

30µ" (0,76µm) Gold. Differential Pair and "Partitionable" (combine differential & single-ended banks in same connector) available. Call Samtec ASP Group.

Processing:

Max Processing Temp:
230°C for 60 seconds
SMT Lead Coplanarity:
(0,10mm) .004" max (025-075)
(0,15mm) .006" max (100-125)
Board Stacking:
Maximum two connectors per board recommended. For applications requiring more contact ipg@samtec.com
Suggested PCB Layouts:
For reference only. Go to www.samtec.com?QTS for recommended PCB layout.

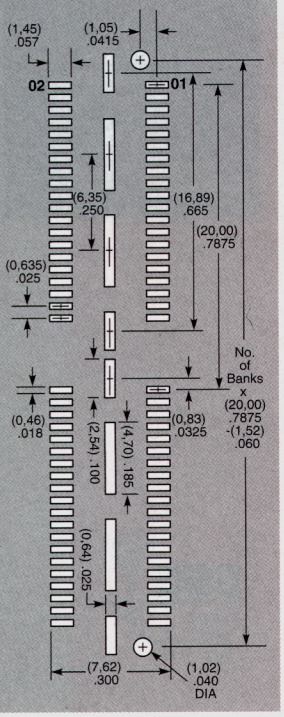

QTS – NO. OF POSITIONS PER ROW – BODY STYLE – PLATING OPTION – D – A – OTHER OPTION

–025, –050, –075, –100, –125
(50 total positions per bank)

Specify LEAD STYLE from chart.

–F
= Gold Flash on Signal Pins and Ground Plane

–L
= 10µ" (0,25µm) Gold on Signal Pins and Ground Plane, Gold Flash on tails

–K
= (7,00mm) .275" DIA Polyimide film Pick & Place Pad

–TR
= Tape & Reel (–075 positions maximum)

–TY
= Tray Packaging

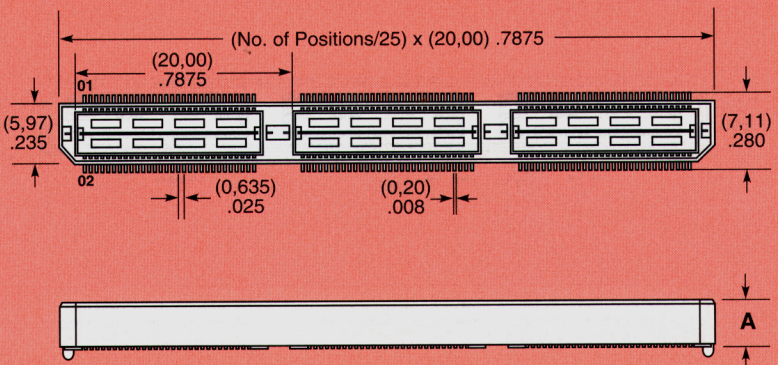

LEAD STYLE	A
–01	(4,27) .168
–02	(7,26) .286
–03	(10,26) .404
–04	(15,24) .600

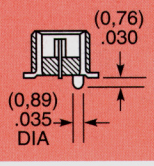

Due to technical progress, all designs, specifications and components are subject to change without notice.

SAMTEC USA • Tel: 1-800-SAMTEC-9 or 812-944-6733 • Fax: 812-948-5047 **SAMTEC UK** • Tel: 01236 739292 • Fax: 01236 727113 **SAMTEC GERMANY** • Tel: +49 (0) 89 / 89460-0 • Fax: +49 (0) 89 / 89460-299
SAMTEC FRANCE • Tel: 01 60 95 06 60 • Fax: 01 60 95 06 61 **SAMTEC ITALY** • Tel: 39 039 6890337 • Fax: 39 039 6890315 **SAMTEC ISRAEL** • Tel: 972-3-7526600 • Fax: 972-3-7526690
SAMTEC SCANDINAVIA • Tel: +46-84477280 • Fax: +46-87420413 **SAMTEC ASIA PACIFIC** • Tel: 65 6745-5955 • Fax: 65 6841-1502 **SAMTEC JAPAN** • Tel: 81-424-42-8318 • Fax: 81-424-42-8319
SAMTEC CHINA • Tel: 86-21-5385-4089 • Fax: 86-21-5385-4047 **SAMTEC TAIWAN** • Tel: 886-02-2364-6077 • Fax: 886-02-2367-9531
SAMTEC HONG KONG • Tel: 852-26904858 • Fax: 852-26904842 **SAMTEC ANZ** • Tel: 613 9512 7747 • Fax: 613 9512 7745