THIS DRAWING IS UNPUBLISHED. RELEASED FOR PUBLICATION AUGUST ,2006.
© COPYRIGHT 2006 By – ALL RIGHTS RESERVED.

REVISIONS

P	LTR	DESCRIPTION	DATE	DWN	APVD
	A1	ECR-18-012908	15AUG2018	RZ	RS

NOTES:

1. PACK IN ACCORDANCE WITH TE SPEC 107-3275
2. CuZnSn PLATING: 80u"
3. Ag PLATING: 200u"
4. ALL DIMENSIONS ARE NOMINAL FOR REFERENCE ONLY UNLESS OTHERWISE STATED

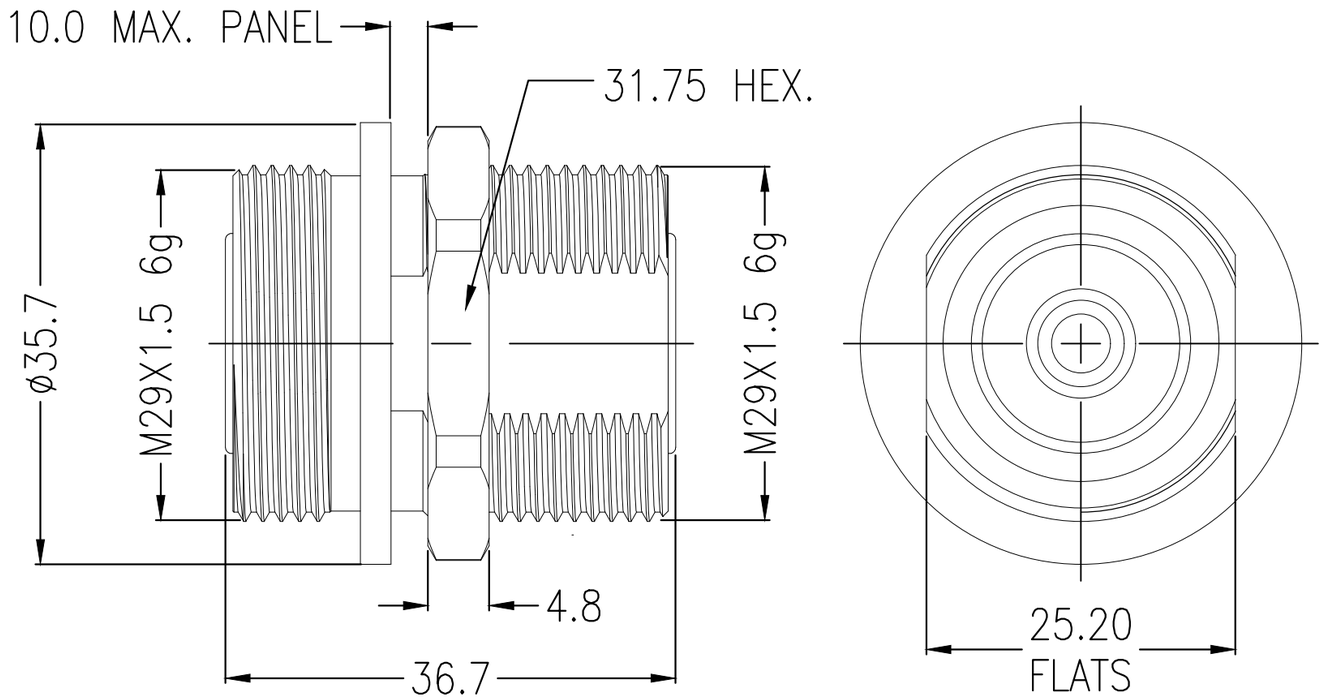

ELECTRICAL	MECHANICAL	ENVIRONMENTAL
Frequency Range (GHz) DC to 6GHz	Recommended Coupling Torque N/A	Temperature Rating –55°C TO +125°C
Voltage Rating (Peak) @ Sea Level 1000 V RMS	Mating cycles 500 cycles	
Insulation Resistance (MIN.) 5000 M ohms	Center contact retention force 45 lbs MIN	
Contact Resistance (Milliohms MAX) Center Contact 1.5, Outer Contact 0.4	VSWR: 1.10 Max @ DC-- 6 GHz	
Dielectric Withstand Voltage: 3000 V RMS Max	Power handling: N/A	
Insertion Loss : 0.1*√F(GHz) dB	3rd Intermodulation: <–160dBc@2X43dBm 900MHz/1800MHz	

			2	PVC (BLACK)	DUST CAP	5
			1	BRASS (2)	SHELL	4
			1	PTFE	INSULATION	3
			1	PHOSPHOR BRONZE (3)	CENTER CONTACT	2
			1	BRASS (2)	BODY	1
			–1	MATERIAL	DESCRIPTION	ITEM
			(1)			
			QUANTITY PER ASSY	PARTS LIST		

THIS DRAWING IS A CONTROLLED DOCUMENT.

DIMENSIONS: mm

TOLERANCES UNLESS OTHERWISE SPECIFIED:

0 PLC	± –
1 PLC	± 0.2
2 PLC	± 0.1
3 PLC	± –
4 PLC	± –
ANGLES	± –

MATERIAL: SEE TABLE

FINISH: –

DWN	ED	13JUN 2018
CHK	BW	13JUN 2018
APVD	RS	13JUN 2018
PRODUCT SPEC	—	
APPLICATION SPEC	—	
WEIGHT	0.000000	

TE Connectivity

NAME: ADAPTER 7/16 Female to 7/16 Female, low PIM –

SIZE	CAGE CODE	DRAWING NO	RESTRICTED TO
A3	00779	C-2081559	—

CUSTOMER DRAWING | SCALE 2:1 | SHEET 1 OF 1 | REV A1

1470-19 (1/15)