© 2023 TE Connectivity. All Rights Reserved.

REVISIONS					
P	LTR	DESCRIPTION	DATE	DWN	APVD
	A	INITIAL VERSION	28SEP2023	F.Y	C.W

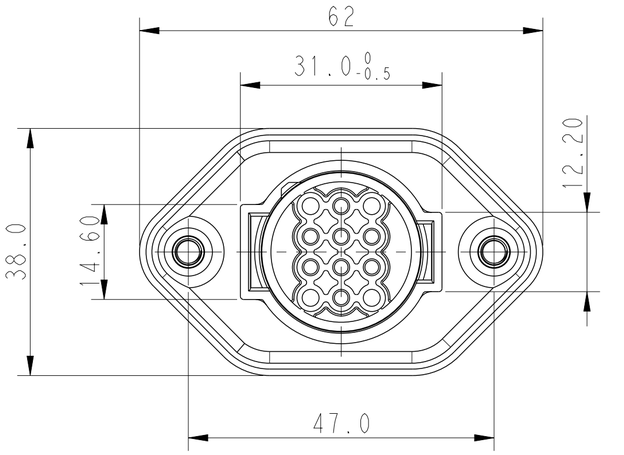

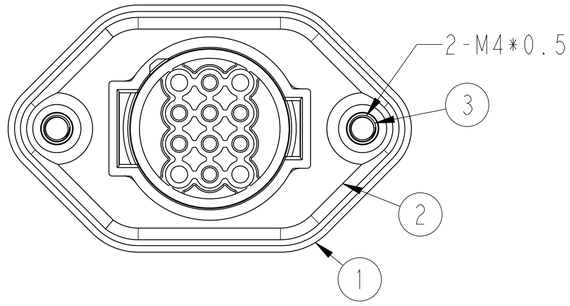

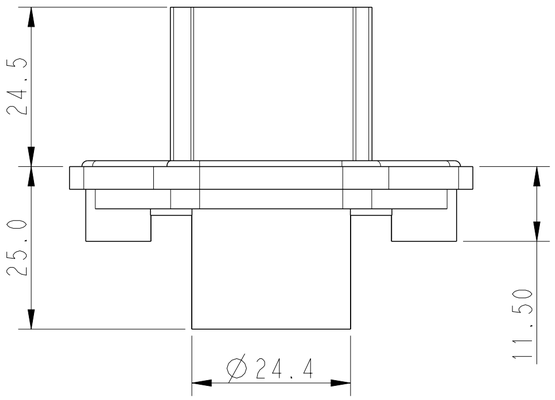

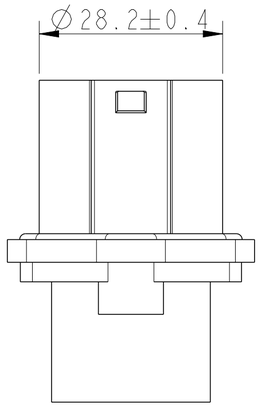

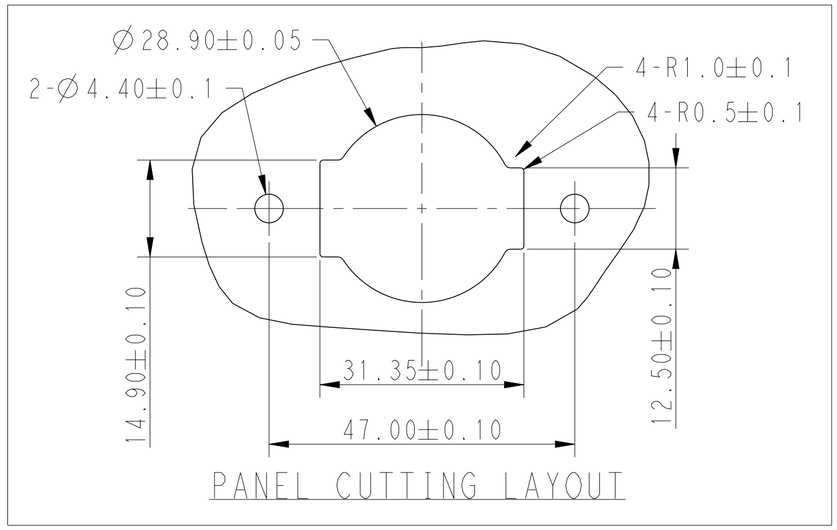

NOTE:
1. TECHNICAL DATA SEE TABLE
2. MATERIAL SEE TABLE
3. THE PIN HOLES WITHOUT CONTACTS USE 2473754-3 FOR SEALING
4. APPICABLE TERMINAL PART NUMBER AND WIRE SIZE AND SINGLE WIRE SEAL SEE TABLE 2

技术要求:
1. 技术参数参见表1
2. 材质见表2
3. 未装针的PIN孔可用2473754-3堵头来封堵
4. 适用端子与导线尺寸以及单线密封件参考表2

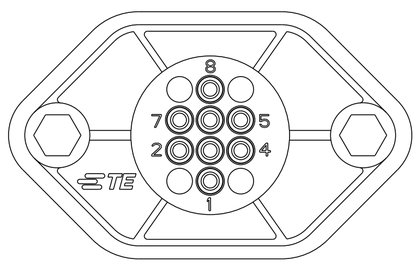

TECHNICAL DATA(TABLE 1)	2470002-00X
RATED VOLTAGE	63V
RATED CURRENT	5A MAX.
POLLUTION DEGREE	3
OVERVOLTAGE CATEGORY	II
INSULATION RESISTANCE	≥100MΩ
DEGREE OF PROTECTION	IP67

TABLE 2

TERMINAL PN	TERMINAL PLATING	WIRE SIZE	INSULATION SIZE OF WIRES(MM)	SINGLE WIRE SEAL PN	BLIND PLUG PN
T2210001010-011	TIN	0.50~0.75mm^2 20AWG~18AWG	∅1.40~∅1.90	2473754-1	2473754-3 (OPTION)
T2210001010-010	GOLD				
T2210001010-001	TIN	0.20~0.35mm^2 24AWG~22AWG	∅1.10~∅1.40	2473754-2	
T2210001010-000	GOLD				

MATERIAL	DESCRIPTION	ITEM	2470002-00X
BRASS	NUT	3	2
RUBBER	PANEL SEAL	2	1
PBT	MALE HOUSING	1	1

A KEYING	B KEYING	C KEYING	KEYING TYPE
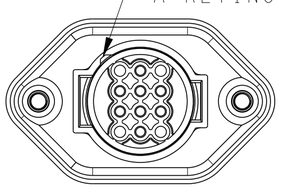	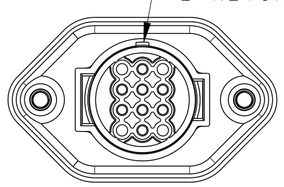	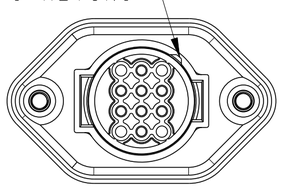	
2470002-1	2470002-2	2470002-3	PART NUMBER

THIS DRAWING IS A CONTROLLED DOCUMENT.

DIMENSIONS: mm

TOLERANCES UNLESS OTHERWISE SPECIFIED:
0 PLC ±0.5
1 PLC ±0.3
2 PLC ±0.25
3 PLC ±-
4 PLC ±-
ANGLES ±-

MATERIAL: SEE NOTE -

FINISH: - -

DWN FENCER YU 28SEP2023
CHK CHRIS WANG 28SEP2023
APVD CHRIS WANG 28SEP2023
PRODUCT SPEC 108-137685
APPLICATION SPEC 114-137685
WEIGHT -

TE Connectivity

NAME: EASYLOCK PLASTIC SIGNAL CONNECTOR MALE,8 POLES -

SIZE	CAGE CODE	DRAWING NO	RESTRICTED TO
A2	00779	C-2470002	-

CUSTOMER DRAWING | SCALE 3:2 | SHEET 1 OF 1 | REV A

1471-9 (3/13)